KAYPRO TECHNICAL MANUAL

SEPTEMBER 1985

Part Number 1484-F

The information contained in this publication is for general reference and is intended for hardware and program designers, programmers, engineers and those who need to understand the design and operation of Kaypro products.

Kaypro Corporation provides this manual on an "as is" basis and without warranty, either express or implied, of any kind, including, but not limited to, merchantability and/or fitness for a particular purpose. The user should be aware that Kaypro may, at any time and without notice, make improvements, modifications and/or changes in any or all products, programs and/or systems referenced in this manual.

The user should also be alert to the fact that this manual might possibly include technical inaccuracies or typographical errors. Additionally, this manual may not contain updated information reflecting improvements, modifications and/or changes in Kaypro products. Changes to the information contained in this manual may also occur from time to time. User discretion is advised.

KAYPRO is a trademark of the Kaypro Corporation, registered in U.S. Patent and Trademark Office.

CP/M is a registered trademark of Digital Research, Inc.

MS-DOS is a registered trademark of Microsoft Corportation

COPYRIGHT (c) KAYPRO CORPORTATION SEPTEMBER, 1985

CONTENTS

SECTION		PAGE
1.Ø	Introduction	
1.1	Purpose Of Technical Manual	1—1
1.2	Scope Of Technical Manual	1—2
1.3	Service Warning	1—2
2.Ø	FCC Information	2—1
3.Ø	Model Specifications	
3.1	KAYPRO 2	3—1
3.2	KAYPRO 2/84 and 2X	3—2
3.3	KAYPRO 4	3—3
3.4	KAYPRO 4/84	3—4
3.5	KAYPRO 4X	3—5
3.6	KAYPRO 1Ø	3—6
3.61	KAYPRO 1Ø with Clock and Modem	3—6.1
3.7	KAYPRO ROBIE	3—7
3.71	KAYPRO 12X	3—7.1
3.8	KAYPRO NEW 2	3—8
3.9	KAYPRO 1	3—9
4.Ø	KAYPRO ROM Revision—CP/M Version Compatibility	4—1
5.Ø	Chassis	
5.1	Chassis Hood Removal (Except KAYPRO ROBIE)	5—1
5.2	Touch-up Information	5—2
6.Ø	Mainboards—Troubleshooting Tips	6—1
6.1	KAYPRO 2 (81-11Ø-n)	6—2
6.2	KAYPRO 2/4 (81-24Ø-n)	6—8
6.3	KAYPRO 1Ø (81-18Ø-n)	6—16
6.4	KAYPRO 2/84 and 2X (81-294-n)	6—26
6.5	KAYPRO 4/84 (81-184-n)	6—34
6.6	KAYPRO ROBIE (81-296-n)	6—42
6.61	KAYPRO UNIVERSAL BOARD (KAYPRO 2, 2X, 4, 4X, 1Ø, 12X, ROBIE)	6—5Ø
6.7	Removal/Installation Instructions	6—57
7.Ø	CRT Assemblies	
7.1	Hardware Descriptions And Adjustments	7—1
7.2	Video Alignment	7—3
7.3	Video Signals on KAYPRO Mainboard	7—4
7.4	Removal/Installation Instructions(Exc. ROBIE)	7—5
8.Ø	Power Supplies	
8.1	Introduction	8—1
8.2	Description and 22ØV Configuration	8—2
8.3	Removal/Installation Instructions	8—5

CONTENTS (Continued)

SECTION		PAGE
9.Ø	Diskette Drives	
9.1	Introduction/Disk Drive Cleaning	9—1
9.2	Which Brand Of Drive Is It?	9—2
9.3	Jumpering Diagrams	9—5
9.4	High-Density (Drivetec) Drives	9—9
9.5	Removal/Installation Instructions	9—1Ø
1Ø.Ø	Hard Disk Drives (KAYPRO 1Ø and 12X)	
1Ø.1	Introduction	1Ø—1
1Ø.2	Description	1Ø—2
1Ø.3	Hard Drive Configuration	1Ø—3
1Ø.4	Hard Drive or Floppy Drive Removal/ Installation Instructions (KAYPRO 1Ø, 12X)	1Ø—4
11.Ø	Hard Disk Controller Board (KAYPRO 1Ø, 12X)	
11.1	Description	11—1
11.2	Removal/Installation Instructions	11—2
12.Ø	Interface Board (KAYPRO 1Ø,12X)	
12.1	Description	12—1
12.2	Removal/Installation Instructions	12—2
13.Ø	Keyboards	13—1
14.Ø	ROBIE Removal/Installation Instructions	
14.1	Chassis Cover	14—1
14.2	Diskette Drives	14—2
15.Ø	Troubleshooting	
15.1	Introduction	15—1
15.2	KAYPRO 2 and 4 Symptom—Fix Guide	15—2
15.3	KAYPRO 1Ø Symptom—Fix Guide	15—8
15.4	KAYPRO ROBIE Symptom—Fix Guide	15—14
15.5	KAYPRO 2/84 and KAYPRO 2X Symptom—Fix Guide	15—19
15.6	KAYPRO 4X Symptom-Fix Guide	15—2Ø
16.Ø	KAYPRO System I/O	
16.1	Video Command Protocol	16—1
16.2	Keyboard Codes and Functions	16—3
16.3	Connector Pin-Outs	16—4
16.4	I/O Port Addresses	16—1Ø
17.Ø	Reference Section	
17.1	ASCII Chart	17—1
17.2	Memory Maps	17—2
17.3	Vendor Addresses	17—7
18.Ø	Suggested References	18—1

CONTENTS (Continued)

SECTION		PAGE
19.Ø	KAYPRO 16	19—1
19.1	Chassis	19—3
19.2	System Boards	19—4
21.21	IC List, KAYPRO 16	19—4.1
19.23	Board Assembly Removal	19—16
19.24	Card Removal	19—18
19.25	Mainboard Removal	19—21
19.26	Disk Controller Board Removal	19—22
19.3	CRT Assembly	19—23
19.33	CRT Removal	19—24
19.4	Power Supply	19—26
19.43	Power Supply Removal	19—29
19.5	Diskette Drives	19—31
19.53	Diskette Drive Removal	19—32
19.6	Hard Disk Drive	19—37
19.63	Hard Disk Drive Removal	19—38
19.7	Keyboard	19—41
19.8	System I/O	19—42
19.81	Parallel Printer	19—42
19.82	I/O Connectors	19—43
19.83	Serial Devices	19—44
19.84	DE-9S Serial Port	19—44
19.85	Serial Printer Cable (DCE)	19—44
19.86	Modem Cable (DTE)	19—45
19.87	DE-9P Serial Port	19—46
19.88	Serial Printer Cable (DCE)	19—46
19.89	Modem Cable (DTE)	19—46
19.9	Video Connector For External RGB Monitor	19—47
19.91	Video Connector For Composite Monitor	19—47
19.92	I/O Port Addresses	19—48
19.93	Memory Map of the KAYPRO 16 Computer	19—49
19.94	Switch Settings	19—5Ø
19.95	Memory Expansion	19—52
2Ø.Ø	KAYPRO 16/2	2Ø—1
2Ø.1	Diskette Drives	2Ø—2

CONTENTS (Continued)

SECTION		PAGE
21.Ø	KAYPRO 286i	
21.1	Description	21—1
21.2	FCC Information	21—2
21.3	KAYPRO 286i Model A Specifications	21—3
21.4	KAYPRO 286i Model B Specifications	21—4
21.5	KAYPRO 286i Model C Specifications	21—5
21.6	KAYPRO 286i Model D Specifications	21—6
22.Ø	Chassis	
22.1	Chassis Cover Removal	22—1
22.2	Chassis Cover Replacement	22—2
23.Ø	System Boards	
23.1	Descriptions for different models	23—1
23.2	Adapter Cards	23—1
23.21	Controller Card	23—1
23.22	Color Card	23—1
23.23	Serial/Parallel Port Card	23—1
23.231	IC List	23—2
23.232	Schematics	23—4
23.24	Adapter Card Removal	23—6
23.25	Adapter Card Installation	23—6
23.3	Mainboard	23—8
23.31	Description	23—8
23.32	IC List, KAYPRO 286i Mainboard	23—9
23.33	Schematics	23—11
23.34	Mainboard Connector Pin Assignments	23—16
23.35	Mainboard Removal	23—18
23.36	Mainboard Installation	23—18
24.Ø	Disk Drives	
24.1	Floppy Diskette Drives	24—1
24.11	Description	24—1
24.12	Floppy Diskette Drive Configurations	24—1
24.13	Floppy Diskette Drive Removal	24—5
24.14	Floppy Diskette Drive Installation	24—6
24.2	Hard Disk Drive	24—8
24.21	Description	24—8
24.22	Hard Disk Drive Configuration	24—8
24.23	Hard Disk Drive Removal	24—8
24.24	Hard Disk Drive Installation	24—9
25.Ø	Streaming Tape Drive	
25.1	Description	25—1
25.2	Streaming Tape Drive Removal	25—1
25.3	Streaming Tape Drive Installation	25—2

CONTENTS (Continued)

SECTION		PAGE
26.Ø	Power Supply	
26.1	Description	26—1
26.2	230V Configuration	26—1
26.3	Power Supply Removal	26—2
26.4	Power Supply Installation	26—2
27.Ø	Keyboard	
27.1	Description	27—1
27.2	Keyboard Connector	27—1
28.Ø	Battery	
28.1	Description	28—1
28.2	Battery Removal	28—1
28.3	Battery Installation	28—2
29.Ø	System I/O	
29.1	Parallel Port Pin Assignments	29—1
29.2	Serial Port Pin Assignments	29—2
29.3	RGB Monitor Adapter Pin Assignments	29—3
29.4	I/O Port Addresses	29—4
29.5	Memory Map of the KAYPRO 286i Computer	29—5
INDEX		

LIST OF ILLUSTRATIONS

FIGURE		PAGE
Figure 7.1	Dotronix Video Board	7—1
Figure 7.2	Elston Video Board	7—1
Figure 7.3	Toshiba Video Board	7—2
Figure 7.4	Micrex Video Board	7—2
Figure 7.5	Yoke Alignment	7—2.1
Figure 9.1	Tandon Half-Height Drive	9—2
Figure 9.2	Epson Drive	9—2
Figure 9.3	Shugard Drive	9—2
Figure 9.4	Tokyo Electric Drive	9—3
Figure 9.5	Toshiba Drive	9—3
Figure 9.6	Hi-Tech Drive	9—3
Figure 9.7	Drivetec Drive	9—4
Figure 9.8	Tandon Full-Height Drive	9—4
Figure 9.8	Tandon Drive Jumpering Diagram	9—5
Figure 9.9	Epson Drive Jumpering Diagram	9—5
Figure 9.10	Shugart Drive Jumpering Diagram	9—6
Figure 9.11	Tokyo Electric Drive Jumpering Diagram	9—6
Figure 9.12	Toshiba Drive Jumpering Diagram	9—7
Figure 9.13	Hi-Tech Drive Jumpering Diagram	9—8
Figure 9.14	Tandon Full-Height Drive Jumpering Diagram	9—8
Figure 9.15	Drivetec Drive Configuration	9—9
Figure 10.1	Microscience Hard Drive 9-Position Switch	10—3
Figure 10.2	Microscience Hard Drive 10-Position Switch	10—3
Figure 10.3	Shugart Hard Drive Configuration Diagram	10—3
Figure 10.4	Seagate Hard Drive Configuration Diagram	10—3.1
Figure 10.5	Seagate Hard Drive Configuration Diagram	10—3.1
Figure 19.1	Board Assembly Removal	19—15
Figure 19.13	Board Assembly	19—19
Figure 19.2	Board Assembly	19—20
Figure 19.23	Boschert Power Supply	19—27
Figure 19.28	Calif D.C. Power Supply	19—28
Figure 19.33	Plastic Standoff	19—30
Figure 19.4	Drive Assembly Unit	19—33
Figure 19.43	Diskette Drive Shield	19—35
Figure 19.5	Diskette Drive Shield	19—36
Figure 19.6	Hard Drive in Drive Shield	19—39
Figure 19.63	Hard Drive Shield	19—39
Figure 19.7	Keyboard DIN Connector	19—41
Figure 19.73	I/O Connectors	19—43
Figure 22-1	Cover Mounting Screws	22—1
Figure 22-2	Chassis Cover Removal	22—2
Figure 23-1	Expanison Slot Cover	23—4
Figure 23-2	Support Bracket	23—4
Figure 23-3	KAYPRO 286i Mainboard Layout	23—20
Figure 24-1	Mitsubishi Floppy Diskette Drive	24—3
Figure 24-2	Power Connector	24—4
Figure 24-3	Grounding Connector	24—4
Figure 24-4	Mounting Screws and Clips	24—5
Figure 24-5	Cover Plate	24—6
Figure 24-6	Drive Cable	24—7

LIST OF ILLUSTRATIONS (Continued)

FIGURE		PAGE
Figure 24-7	Drive Cables in the KAYPRO 286i	24--7
Figure 25-1	Power Supply Mounting Screws and Voltage Selector Switch	25--1
Figure 27-1	Location of Battery	27--1

19.Ø KAYPRO 16

The KAYPRO 16 is an Intel 8Ø88 microprocessor based computer that supports 16-bit operations and runs at 4.77MHz. In addition to the 8Ø88, the KAYPRO 16 uses the 8237A-5 DMA, the 8253-5 timer, the 8255A-5 peripheral interface, the 8259A interrupt controller, the 8284A clock, and the 8288 bus controller. Data sheets for these chips can be found in the Microprocessor and Peripheral Handbook by Intel Corporation, order number: 21Ø844-ØØ1.

KAYPRO 16 SPECIFICATIONS

CPU	Intel 8088, operating at 4.77MHz.
RAM	256K bytes standard; expandable to 640K bytes.
MAINBOARD	81-510-n series.
EXPANSION	Four slots. Three are used for the system, leaving one slot for user options.
DISK STORAGE	One 5-1/4 inch, double-density, double-sided, floppy disk drive providing 360K bytes of storage per diskette. One hard disk drive providing 10M bytes of storage.
KEYBOARD	Detachable, IBM compatible keyboard.
VIDEO SCREEN	Non-glare, 9-inch, green phosphor screen with a 25 row x 80 column display.
I/O CONNECTIONS	One DB-25S parallel port (for parallel devices), one DE-9S or DE-9P serial port (for serial devices), one DE-9S video port (for an external RGB monitor), one composite video connector.

19.1 CHASSIS

CHASSIS HOOD REMOVAL

1. Turn off the machine.
2. Disconnect the AC power by unplugging the power cord from the wall outlet.
3. Remove the ten screws from the chassis hood; there are two on top and four on each side.
4. Remove the hood from the chassis.

CHASSIS HOOD REPLACEMENT

1. Set the hood on the chassis so that the two holes on top of the hood are aligned with the two holes on top of the chassis.
2. Insert the two flat-head screws into the holes on top of the hood. Start them, but do not tighten them yet.
3. Insert the eight round-head screws, four on each side, and start them.
4. Tighten each screw securely.

19.2 SYSTEM BOARDS

The KAYPRO 16 includes a mainboard and three cards as the standard system.

The mainboard is socketed for 512K bytes of RAM, one half is populated and one half is left open for expansion. The mainboard contains the video decoder circuitry which decodes RGB into 16 grey levels of monochrome. Also on the mainboard is the interface between the bus and the WD1002 disk controller board.

Three cards are standard in the expansion chassis, leaving one slot open for an optional card.

The processor card contains the keyboard interface circuitry, the 8237A-5 DMA, the 8253-5 Timer, the 8255A Programmable Peripheral Interface, the 8259A Programmable Interrupt Controller, the 8288 Bus Controller and the 8284A Clock Generator. The processor card is also socketed for an Intel 8087 Numeric Data Co-Processor. The numeric co-processor is an option, therefore the socket is not populated.

The floppy-RAM-I/O card consists of the NEC uPD765 floppy disk controller, additional RAM sockets, and the I/O interfaces. There are two I/O connectors on this card, one is a DB-25S (parallel) and one is either a DE-9S or DE-9P (serial). The KAYPRO 16 uses the DB-25S connector for its parallel interface with peripherals. The DE-9S or DE-9P serial connector provides the interface for serial devices such as modems, plotters, or serial printers.

The color graphics card supplies the interface for an external RGB monitor through its DE-9S connector. There is also a connector for composite video on this card. Both of these connectors use industry standard cables.

IC LIST, KAYPRO 16

Reference Designation		Description
Mainboard, 81-511		
U1 - U36	6665-AP15	64K x 1, 150ns dynamic RAM
U73, U95, U104	SN74LS244N	Tri octal buffer
U74, U90	74LS245	Tri octal transceiver
U77, U103	74LS74	Dual "D" flip flop
U78, U89, U92	74LS08	Quad AND gate
U79, U100	74LS00	Quad NAND gates
U80	74LS32	Quad OR gate
U81, U97, U101	74LS04	Hex inverter
U82, U96	74LS30	Eight-input NAND gate
U83	7406	Hex inverter buffer/driver
U84, U85	74S734N	Memory driver
U86, U93	74LS138N	Decoder/demultiplexer
U90	74S280	Parity generator/checker
U91	2764-25	EPROM
U98	74LS156	Decoder/demultiplexer
U102	74LS02	Quad NOR gate
Floppy-RAM-I/O Card, 81-515		
U29	74LS155	Decoder/demultiplexer
U30, U34, U37	74LS240	Octal inverter buffer
U31, U47	74LS174	Hex "D" flip-flop
U32	74LS125	Quad tri buffer
U33	MC1488	Quad line driver
U35	74LS175	Quad SCHMITT transceiver
U36	PAL16R6A	Programmable array logic
Color Graphics Card, 81-517		
U1, U13	74LS10	Triple 3-input NAND gate
U2, U18	74LS86	Quad exclusive-OR gate
U3	74LS51	AND-OR-Invert gate
U4, U52	74LS32	Quad 2-input OR gate
U5	74LS157	Multiplexer
U6	74LS02	Quad 2-input NOR gate
U8, U29	74LS164	Shift register
U9, U66	74LS00	Quad 2-input NAND gate
U10	74LS151	Multiplexer
U11, U30	74S174	Hex "D" flip-flop
U12	74LS08	Quad 2-input AND gate
U14, U15, U54	74LS04	Hex inverter
U16	74LS125	Quad tri-state buffer
U17, U53	74LS74	Dual "D" flip-flop
U19, U34, U39, U51, U63	SN74LS244N	Tri octal buffer
U20, U21, U26, U31	74S74N	Dual "D" flip-flop
U22, U32	74LS153	Multiplexer
U23, U25, U33, U55	74LS174	Hex "D" flip-flop

Color Graphics Card, 81-517, con't.

U27, U41	74SØØ	Quad 2-input NAND gate
U28	74LS138N	Decoder/demultiplexer
U29	74LS393	Binary ripple counter
U35, U36, U45, U46, U49, U5Ø, U61, U62	6665-AP15	64K x 1, 15Øns dynamic RAM
U37, U44, U47, U48	74LS374	Octal "D" flip-flop
U4Ø	6331	PROM
U42, U43, U59	SN74LS166N	Shift register
U56	74S163	Binary counter
U57	74SØ4	Hex inverter
U58	2732	EPROM
U6Ø	74LS273	Octal "D" flip-flop
U64, U65	74LS3Ø	8-input NAND gate
U67	74LS245	Octal transceiver

Processor Card, 81-513

U1	74LS322A	8-bit shift register
U2	8255	Programmable peripheral interface
U3	2764-25	EPROM
U4	8237A-5	DMA controller
U6	74LS67Ø	Register file
U7	74LS125	Quad tri buffer
U8, U17, U3Ø	74LS74	Dual "D" flip-flop
U9, U27	74LS175	Quad "D" flip-flop
U1Ø	8253-5	Programmable interval timer
U11, U16, U24, U25	74LS373	Octal latch
U12, U18, U22	SN74LS244N	Octal buffer
U13	8259A	Programmable interrupt controller
U14	8Ø88	CPU
U15	8288	Bus controller
U19	74LS37	Quad NAND buffer
U2Ø	74LSØ4	Hex inverter
U21	74LS32	Quad OR gate
U23, U26	74LS245	Octal transceiver
U28	74LS138N	Decoder/demultiplexer
U29	81-485	Programmable array logic
U31	74LS243	Quad transceiver
U32	81-484	Programmable array logic
U33	8284A	Clock generator/driver

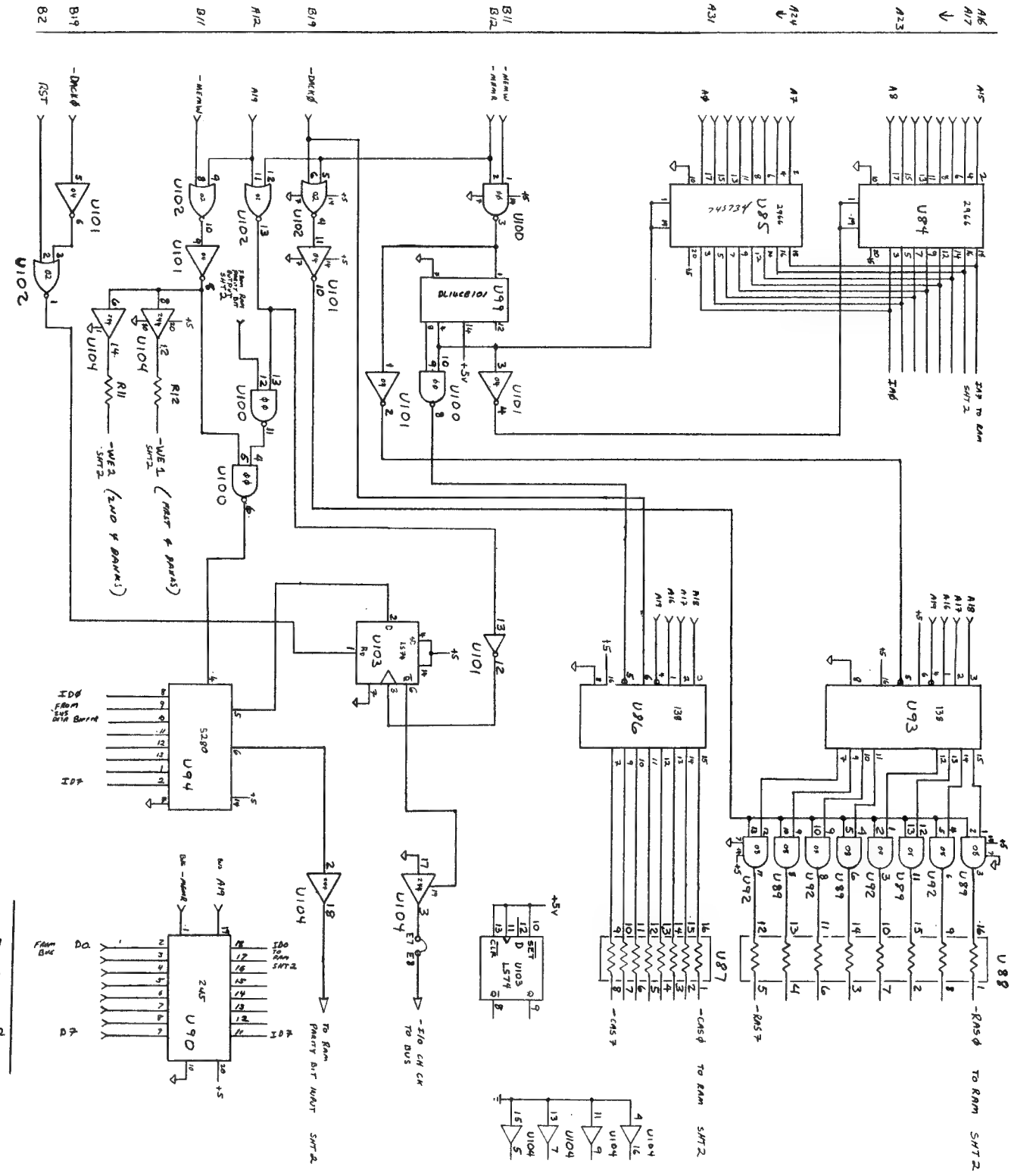

A	ALL	MOVED CONN. FROM U99-12 TO U99-4. ADDED UNUSED SECTIONS OF U103 & U104.	11-9-84 RWS
LTR	EFFECT	DESCRIPTION	DATE APPROV
		REVISIONS	

UNLESS OTHERWISE SPECIFIED DIMENSIONS ARE IN INCHES TOLERANCES ON DECIMALS ± .010 ANGLES ± 0° 30' FRACTIONS ± 1/32 SURFACE FINISH REQUIRED ✓ DO NOT SCALE THIS DRAWING RELEASE DATE

DRN. H. BOYLE CHK'R APPR. MATERIAL FINISH

NEXT LINEAR SYSTEMS, INC. DEL MAR, CALIFORNIA

SCHEMATIC, RAM SECTION
MAIN BOARD
KAYPRO_16

DWG. NO. 03526 C 81-511

SIZE A

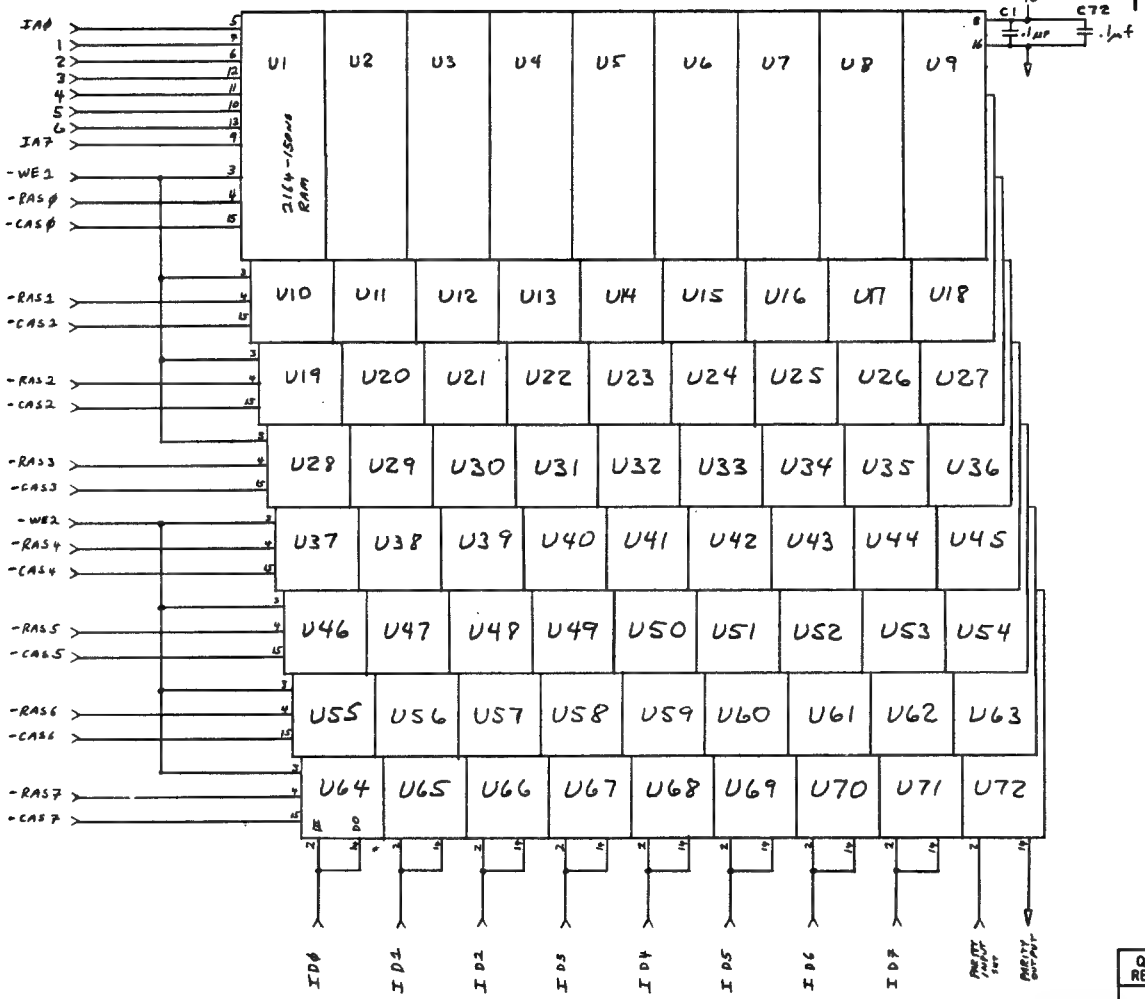

REVISIONS					
ZONE	LTR.	EFFECT.	DESCRIPTION	DATE	APPROVED

PARTS COUNT
72 - 2164A-150NS
72 - .1uf CAPS

NOTES:

1. IA0-IA7 ARE COMMON TO ALL RAM CHIPS
2. POWER + GROUND PINS 8+16 ARE COMMON TO ALL CHIPS
3. DATA INPUT + OUTPUT LINES, PINS 2+14, ARE COMMON TO ALL CHIPS ON A VERTICAL ROW

QTY REQD	PART OR IDENTIFYING NO.	NOMENCLATURE OR DESCRIPTION	MFR. CODE	CIRCUIT REF.	ITEM NO.

PARTS LIST

UNLESS OTHERWISE SPECIFIED		CONTR. NO.	
DIMENSIONS ARE IN INCHES TOLERANCES ON		DRAWN	
DECIMALS ± .010	ANGLES ± 0° 30'	CHECK	
FRACTIONS ± 1/32		APPR	RWS 10-23-84
MATERIAL		RELEASE DATE	

NEXT ASSY.	FINAL ASSY.	NEXT ASSY.	FINAL ASSY.
APPLICATION		QTY.	

NON-LINEAR SYSTEMS, INC.
DEL MAR, CALIFORNIA

SCHEMATIC, MEMORY SECTION
MAIN BOARD
KAYPRO 16

SIZE	CODE IDENT NO.	
C	03626	81-511

SCALE | WEIGHT | SHEET 2B

REVISIONS					
ZONE	LTR.	EFFECT.	DESCRIPTION	DATE	APPROVED

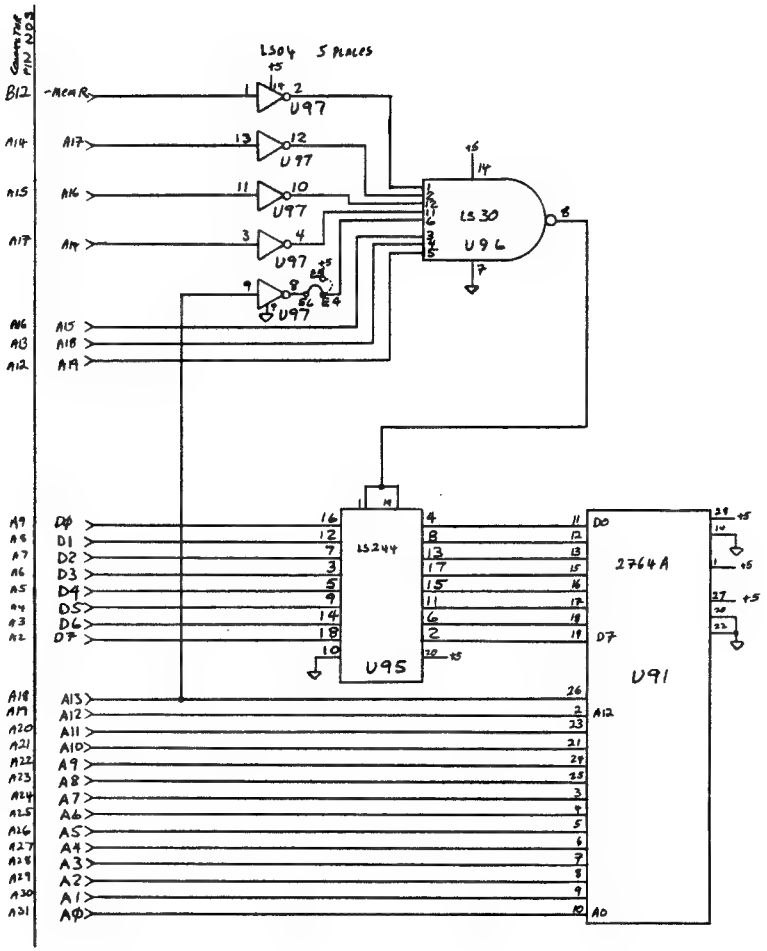

QTY REQD	PART OR IDENTIFYING NO.	NOMENCLATURE OR DESCRIPTION	MFR. CODE	CIRCUIT REF.	ITEM NO.
PARTS LIST					

UNLESS OTHERWISE SPECIFIED	CONTR. NO.	
DIMENSIONS ARE IN INCHES TOLERANCES ON DECIMALS ± .010 ANGLES ± 0° 30' FRACTIONS ± 1/32	DRAWN	
	CHECK	
	APPR	RWJ 10-24-84
	RELEASE DATE	
MATERIAL		

NEXT ASSY.	FINAL ASSY.	NEXT ASSY.	FINAL ASSY.
APPLICATION		QTY.	

NON-LINEAR SYSTEMS, INC.
DEL MAR, CALIFORNIA

SCHEMATIC, HARD DISK PROM SECTION
MAIN BOARD
KAYPRO 16

SIZE	CODE IDENT NO.	
C	03626	81-511

SCALE | WEIGHT | SHEET 2C

REVISIONS					
ZONE	LTR.	EFFECT.	DESCRIPTION	DATE	APPROVED

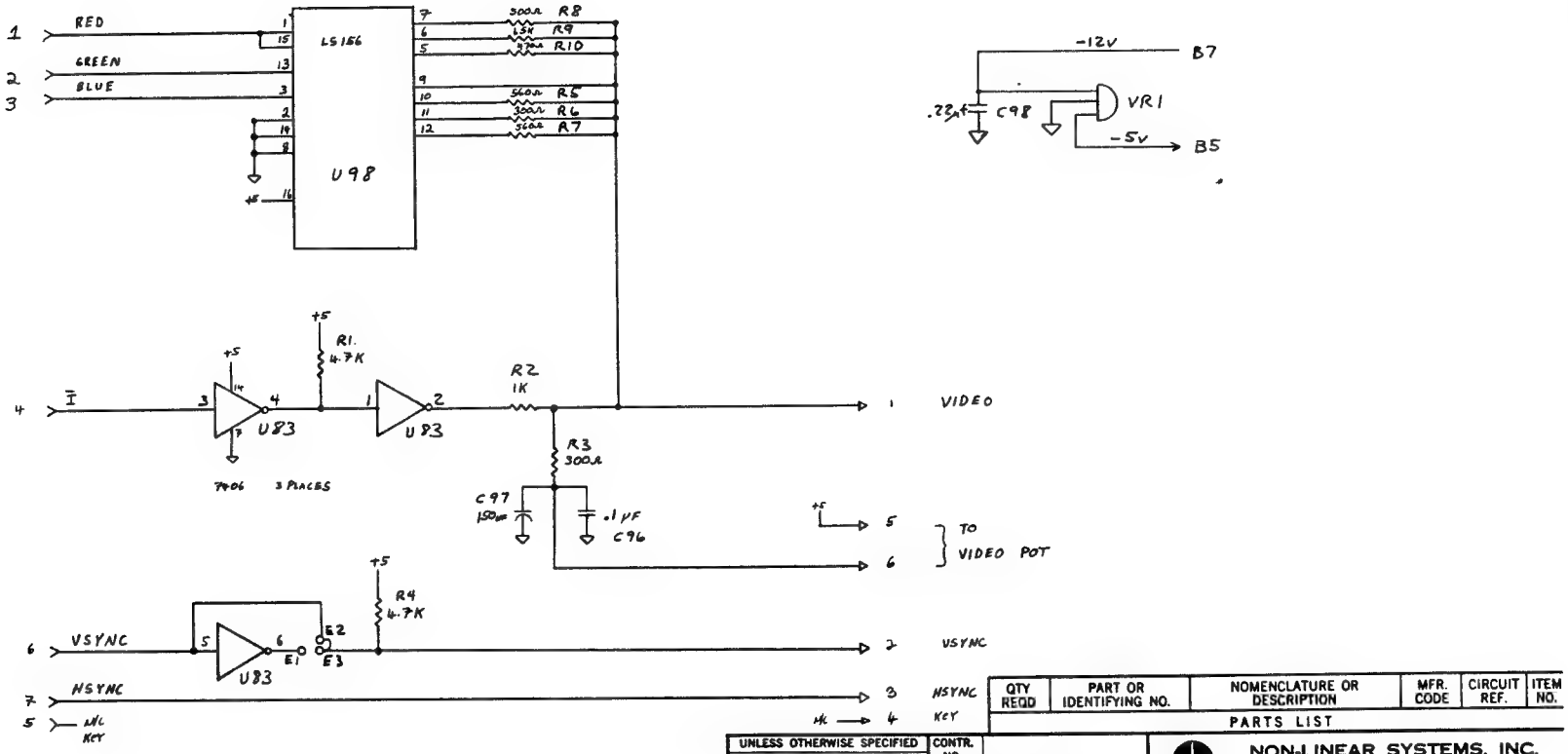

QTY REQD	PART OR IDENTIFYING NO.	NOMENCLATURE OR DESCRIPTION	MFR. CODE	CIRCUIT REF.	ITEM NO.

PARTS LIST

UNLESS OTHERWISE SPECIFIED	CONTR. NO.		
DIMENSIONS ARE IN INCHES TOLERANCES ON DECIMALS ± .010 ANGLES ± 0° 30' FRACTIONS ± 1/32	DRAWN		
	CHECK		
	APPR	R.W.T	10-24-77
	RELEASE DATE		
MATERIAL			

NEXT ASSY.	FINAL ASSY.	NEXT ASSY.	FINAL ASSY.
APPLICATION		QTY.	

NON-LINEAR SYSTEMS, INC.
DEL MAR, CALIFORNIA

SCHEMATIC, VIDEO SECTION MAIN BOARD

KAYPRO 16

SIZE	CODE IDENT NO.	
C	03626	81-511

SCALE | WEIGHT | SHEET 2D

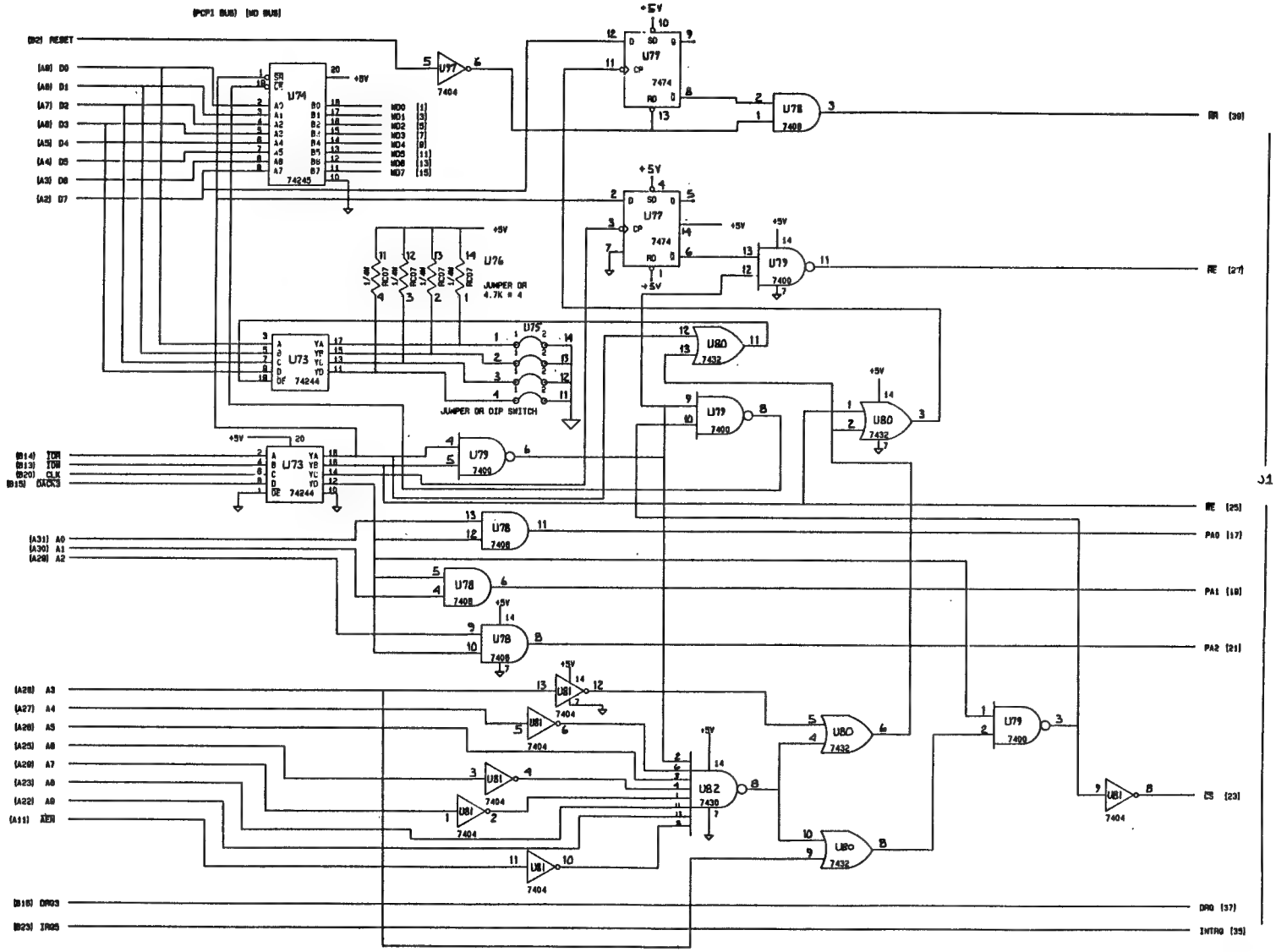

DRAWN	K. BILINSKI	7-23-84	NON LINEAR SYSTEMS, INC. DEL MAR, CALIFORNIA
CHECK	J.R. LEMON	11-13-84	
APPR		11-29-84	
MATERIAL			SCHEMATIC, HARD DISK INTERFACE SECTION, MAIN BOARD
			KAYPRO 16
			03626 D 81-511
			SHEET 25

SCHEMATICS: PROCESSOR CARD

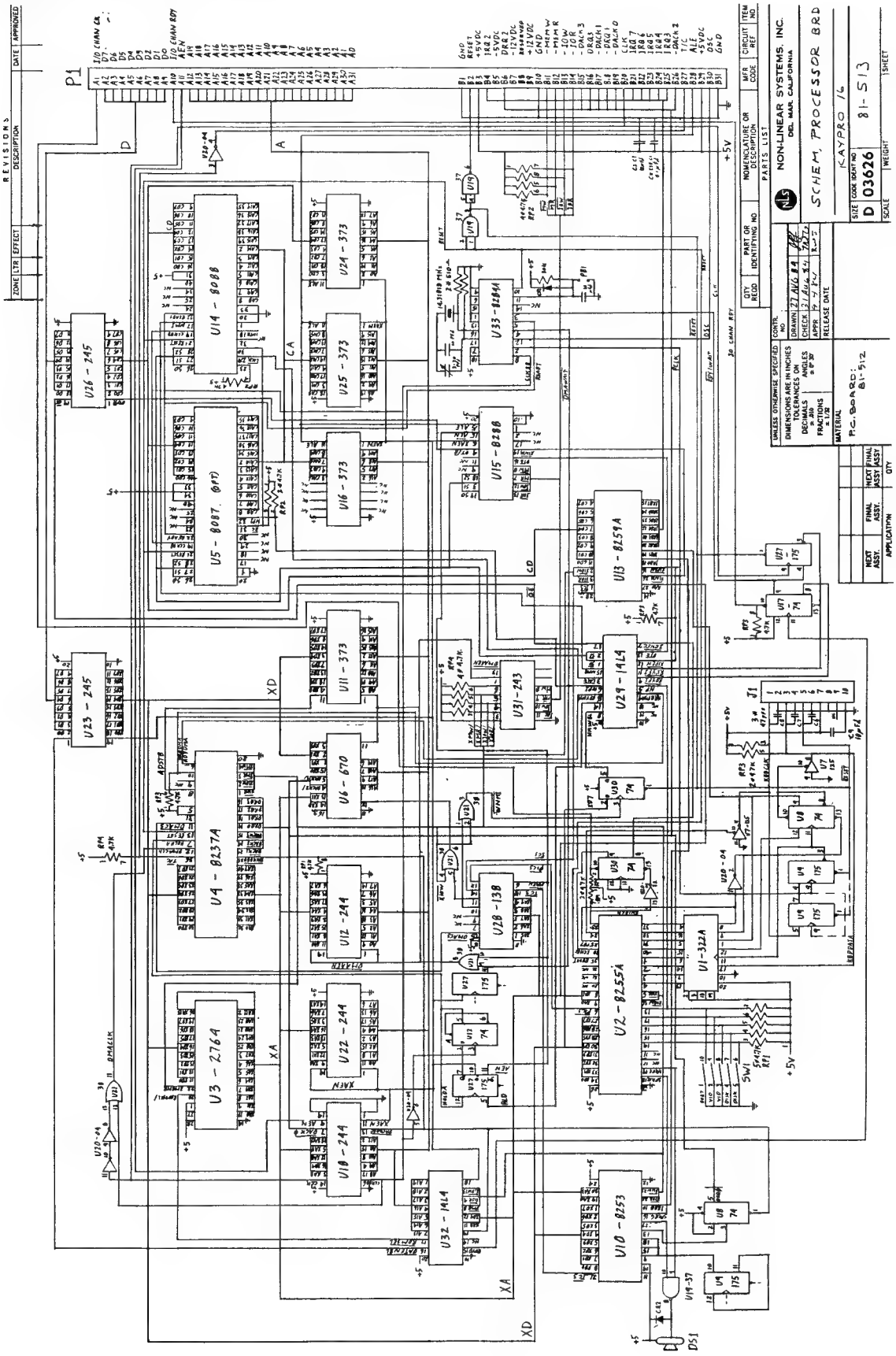

SCHEMATICS: FLOPPY-RAM-I/O CARD

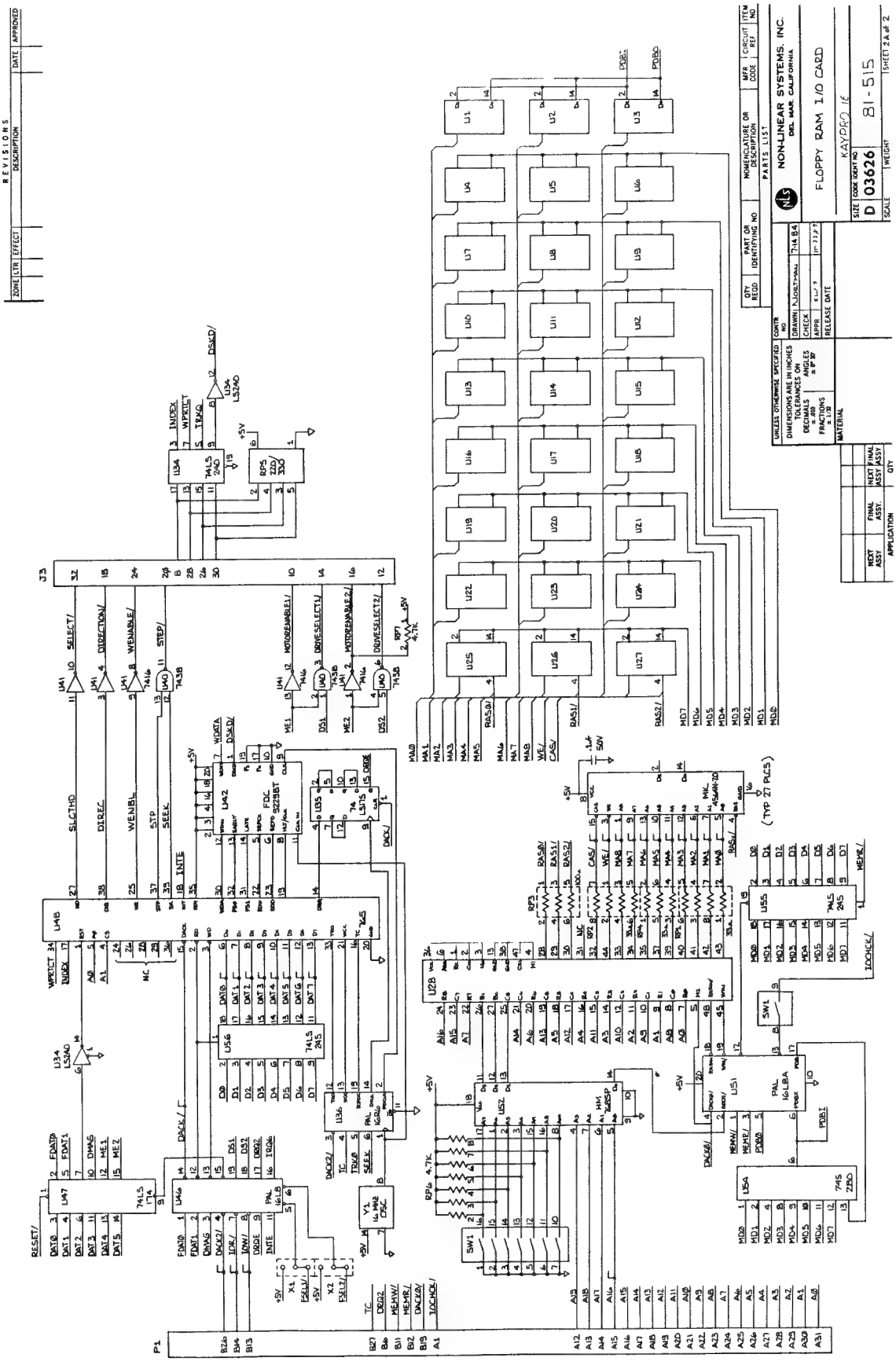

SCHEMATICS: FLOPPY-RAM-I/O CARD

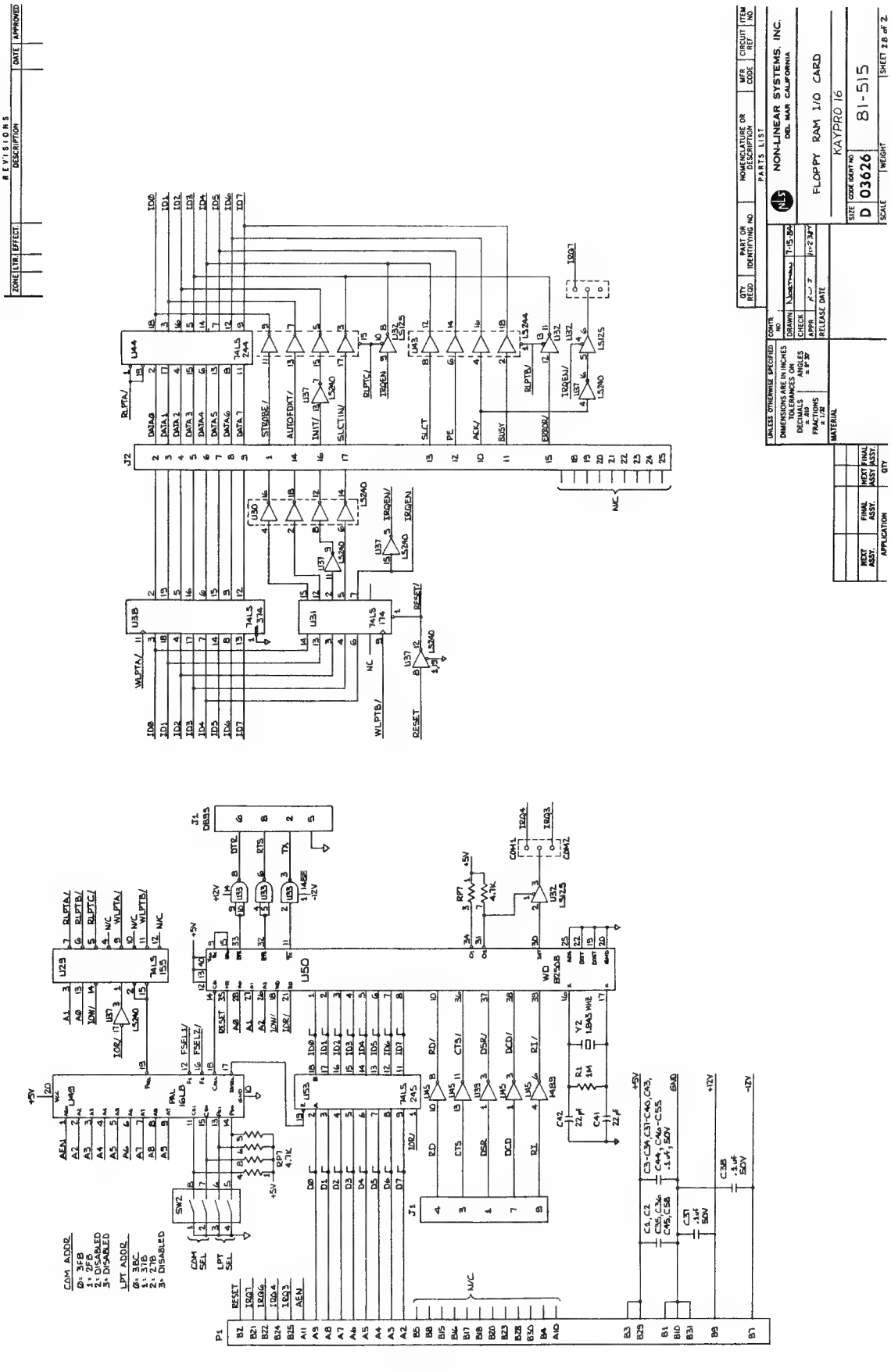

SCHEMATICS: COLOR GRAPHICS CARD

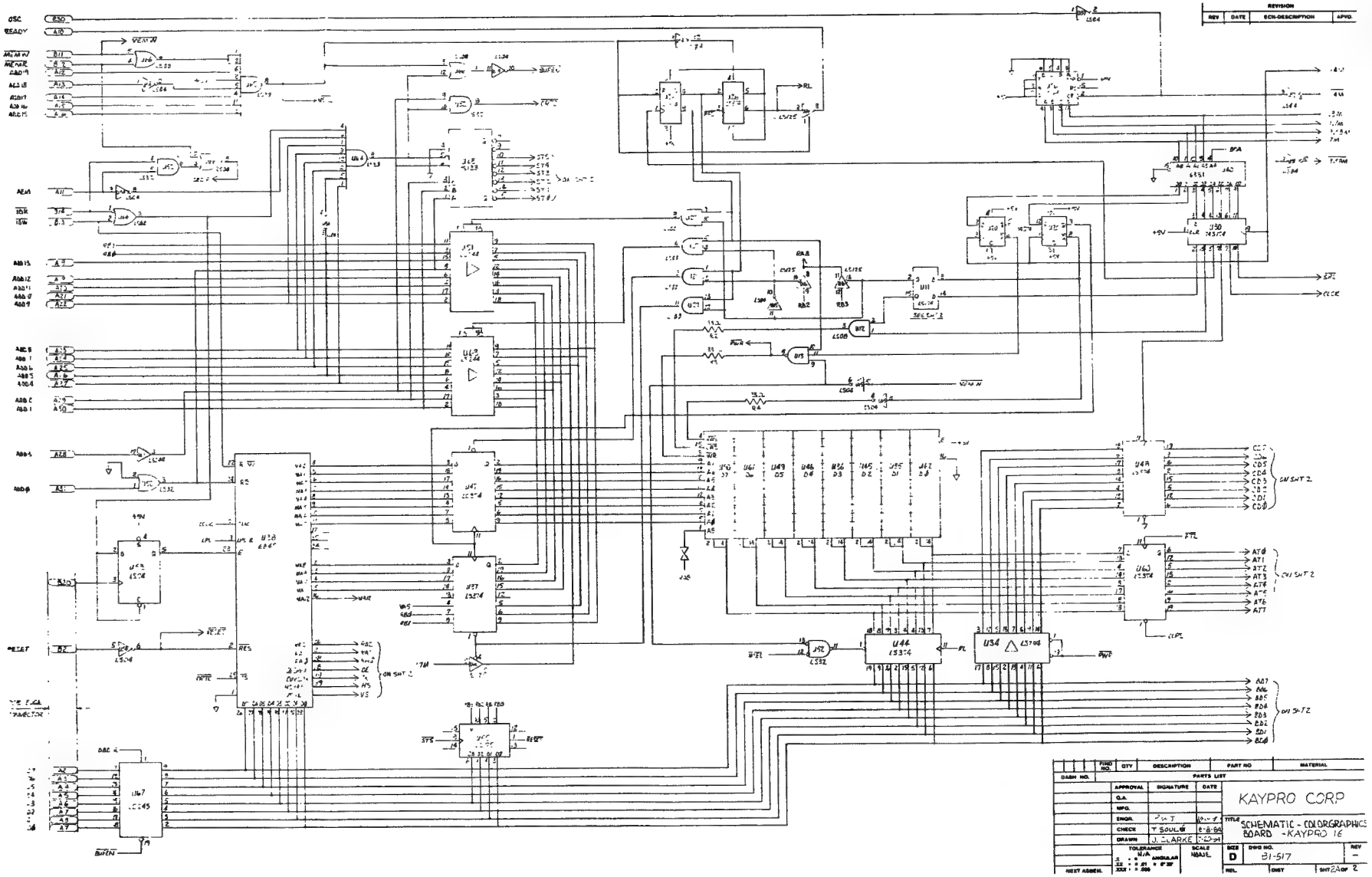

SCHEMATICS: COLOR GRAPHICS CARD

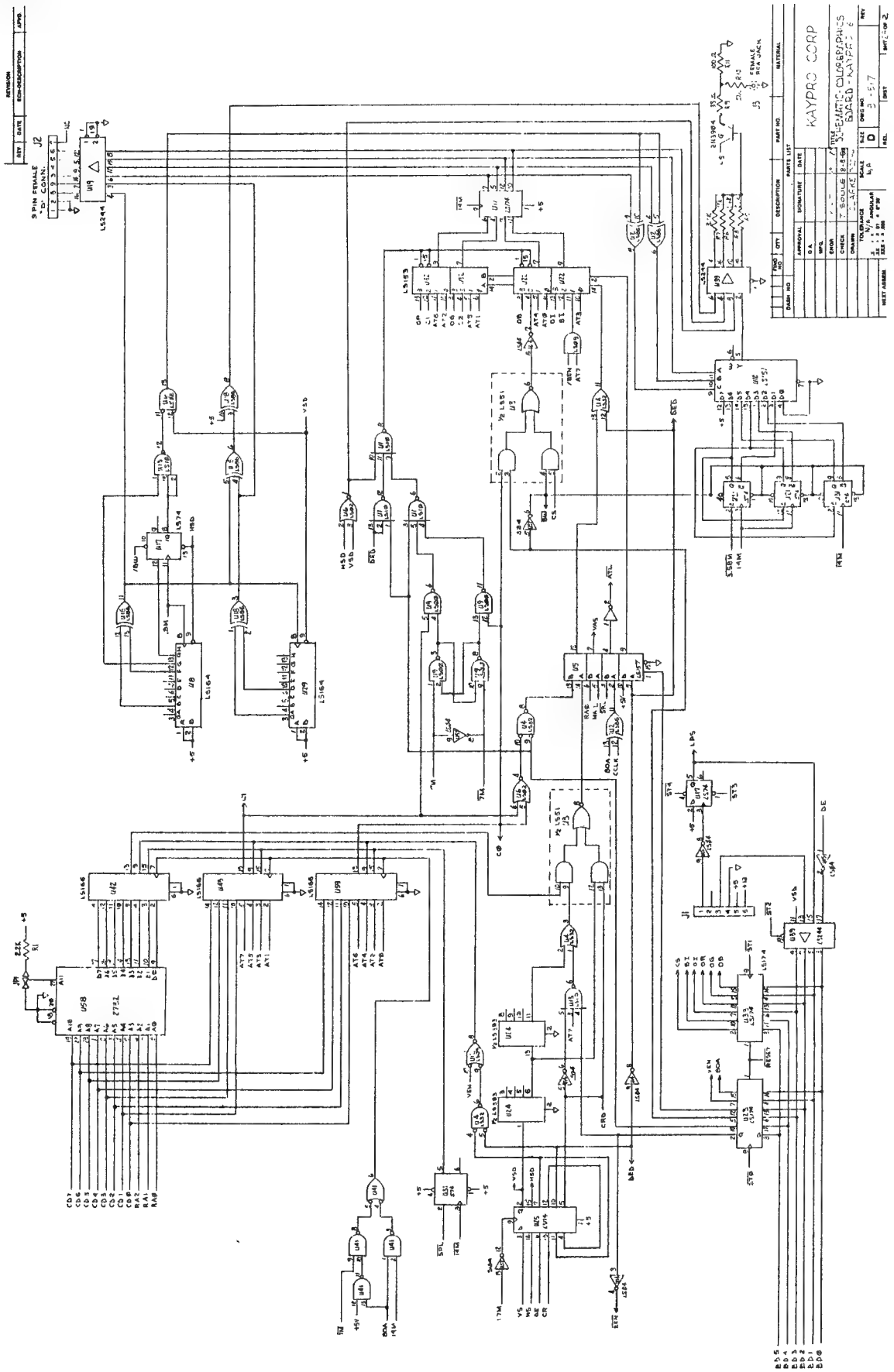

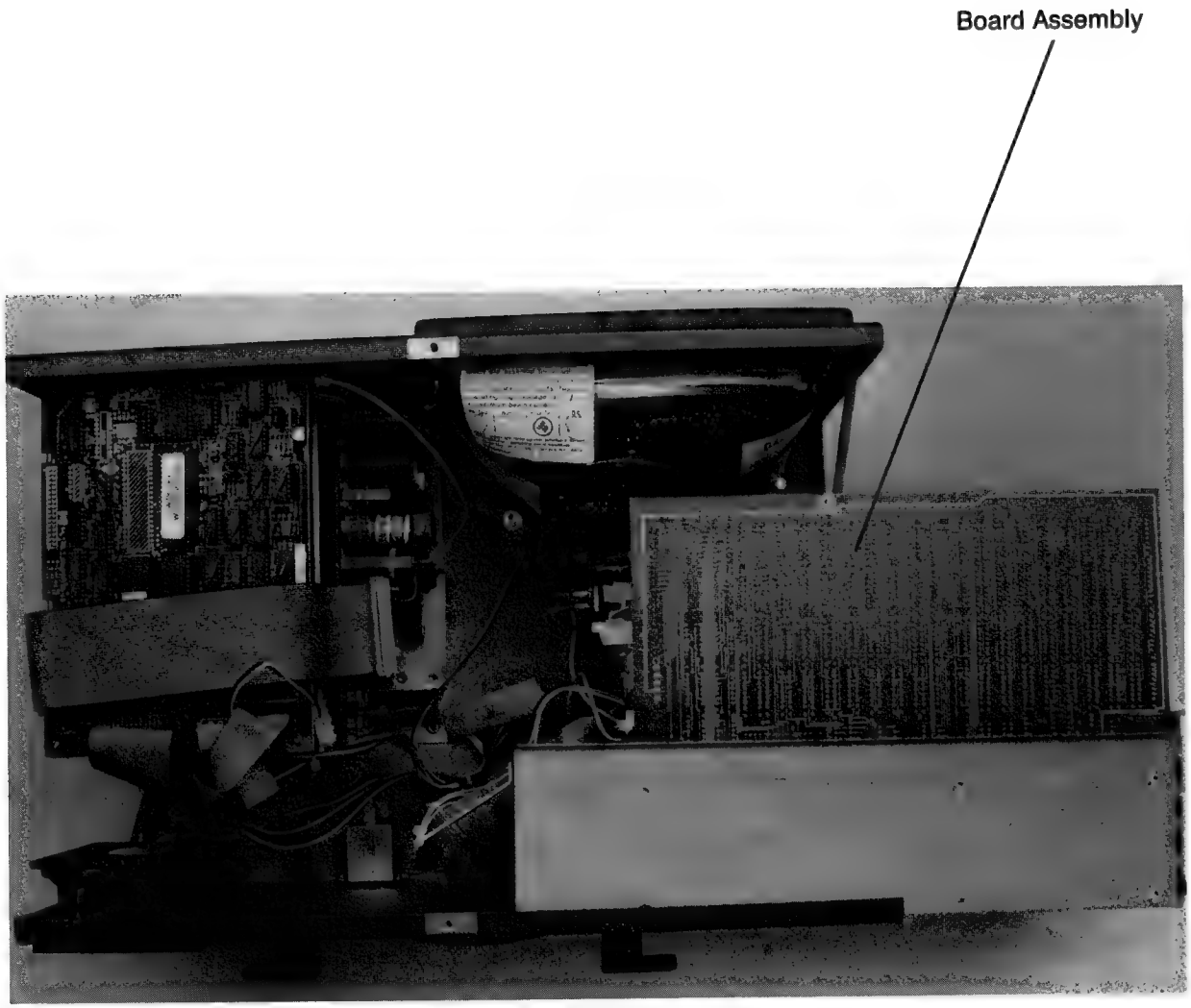

Figure 19.1
Board Assembly Removal

19.23 BOARD ASSEMBLY REMOVAL

1. Remove the chassis hood (19.1).

2. Remove the screw that attaches the plastic standoff and the front, center of the mainboard.

3. Position the machine so that the rear of it is facing you.

4. Remove the two video plugs from the right side of the mainboard.

5. Remove the power connector from the disk controller board.

6. Remove the 40-pin ribbon cable from the disk controller board.

7. Remove the 34-pin ribbon cable from the floppy disk drive.

Note: Support the bottom of the board assembly with one hand while following the instructions in step 8.

8. Remove the four screws from the rear of the chassis that attach the board assembly and the computer chassis.

9. Slide the board assembly to the right about three inches and disconnect the power supply connector from the bottom, left side of the mainboard.

10. Continue sliding the board assembly to the right and remove it from the chassis.

11. Remove the keyboard connector from the processor card.

BOARD ASSEMBLY INSTALLATION

1. With the rear of the computer facing you, set the board assembly on the rear of the machine chassis and connect the keyboard plug to the processor card. (J1 on the processor card)

2. Turn the board assembly so that the mainboard is parallel to the bottom of the machine and connect the plug from the power supply to the mainboard.

3. Position the board assembly inside the chassis so that the mounting holes are aligned with those in the rear of the machine chassis.

4. Insert two screws in the top mounting holes of the chassis, but do not tighten them yet.

5. Insert two screws in the bottom mounting holes of the chassis.

6. Tighten the four screws. (Occasionally, if two of the screws are tightened before the other two are inserted, the mounting holes won't align properly)

7. Replace the power connector on the disk controller board.

8. Replace the 40-pin ribbon cable on the disk controller board.

9. Replace the 34-pin ribbon cable on the floppy disk drive.

10. Replace the two video plugs on the side of the mainboard.

11. Replace and tighten the screw that connects the front of the mainboard and the plastic standoff.

19.24 CARD REMOVAL

1. Remove the chassis hood (19.1).

2. Remove the board assembly (19.23).

3. Refer to figure 19.13.

4. Position the board assembly so that the mainboard is parallel to the work surface and the component side of the board is face up.

Note: The board assembly should now be in this position: The I/O connectors are on the right side of the board assembly and the air-flow louver is on the left side. The top, right side of the card cage has four screws. Three of these screws each hold a card in place and one holds a spacer for an optional card. The top, left side of the card cage has a retainer plate secured with two screws.

The cards are in this order in the slots:
A. Empty space for optional card. (This should be closest to you)
B. Color Graphics card.
C. Floppy-RAM-I/O card.
D. Processor card. (This should be farthest from you)

5. Remove the two screws that secure the retainer plate to the card cage. (Top left side of the card cage)

6. Remove the screw that secures the card being replaced. (Top right side of card cage)

7. Remove the card from the card cage by sliding it upward until the edge connector is separated from the expansion slot receptacle and the card is out of the card cage.

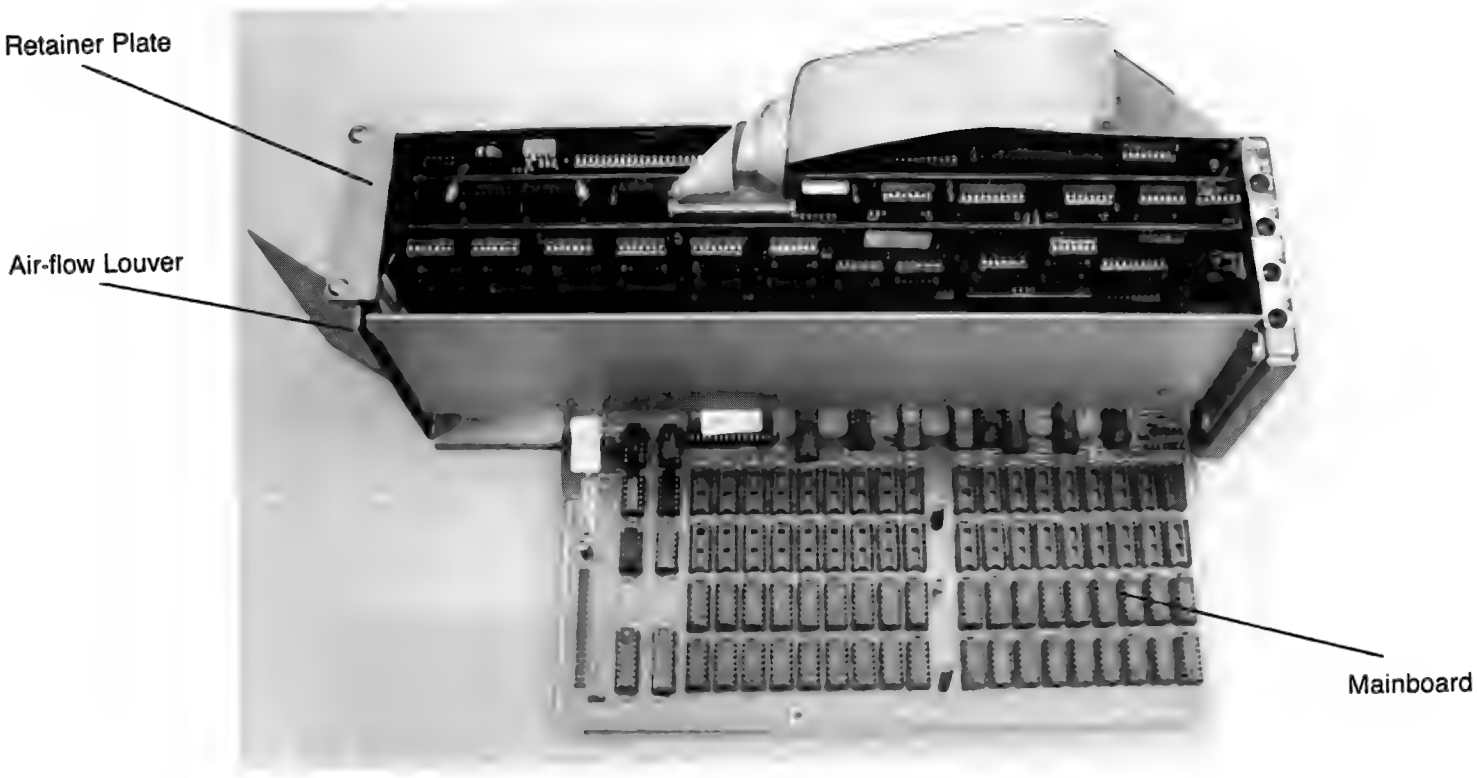

Figure 19.13
Board Assembly

CARD INSTALLATION

1. Refer to figure 19.13.
2. Position the card above the card cage so that the edge connector is above the expansion slot receptacle.
3. Refer to figure 19.2.
4. Lower the card into the card cage so that the mounting bracket tab fits into the space between the mainboard and the side of the card cage.
5. Press the card until it is firmly seated in the expansion slot receptacle.
6. Replace and tighten the screw that secures the mounting bracket and the card cage.
7. Position the retainer plate on the card cage so that the mounting holes are aligned.
8. Replace and tighten the two screws that secure the retainer plate and the card cage.
9. Replace the board assembly (19.23).
10. Replace the chassis hood (19.1).

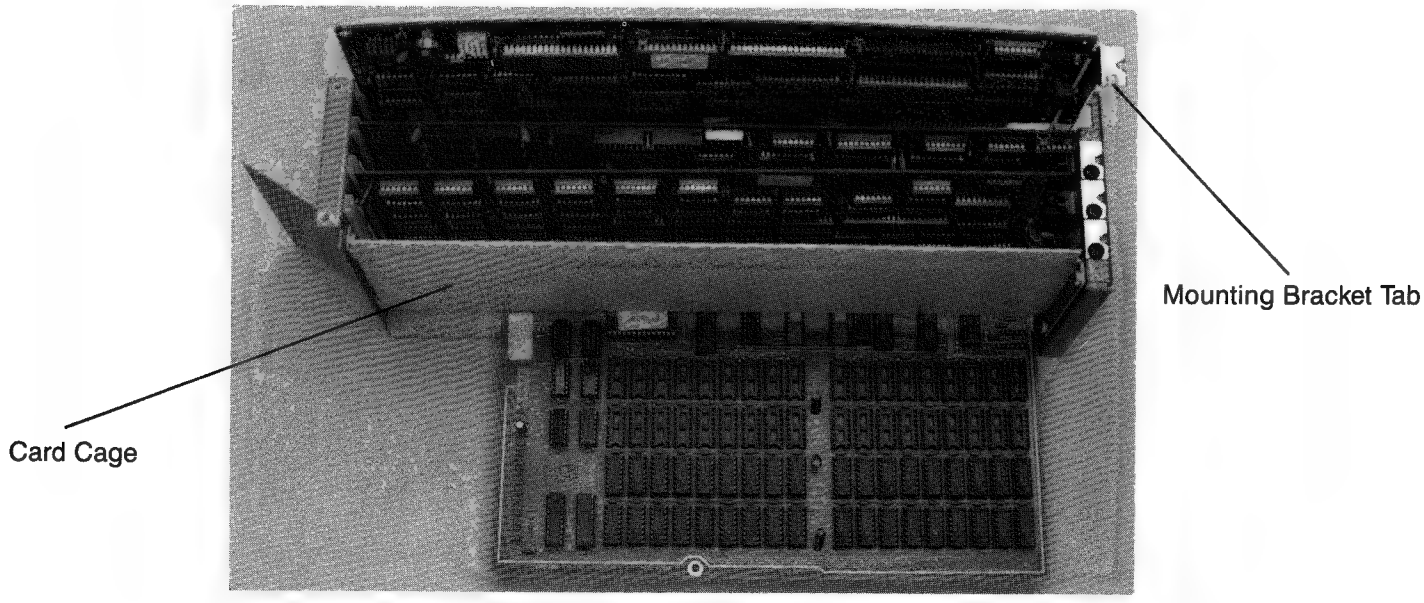

Figure 19.2
Board Assembly

19.25 MAINBOARD REMOVAL

1. Remove the chassis hood (19.1).
2. Remove the board assembly (19.23).
3. Remove the three cards from the card cage (19.24).
4. Remove the six screws that secure the mainboard to the card cage.
5. Slide the mainboard out of the card cage.

MAINBOARD INSTALLATION

1. Slide the mainboard into the card cage and position it so that the mounting holes in the board are aligned with the standoffs on the cage.
2. Insert six screws into the mounting holes and tighten them.
3. Replace the three cards (19.24).
4. Replace the board assembly (19.23).
5. Replace the chassis hood (19.1).

19.26 DISK CONTROLLER BOARD REMOVAL

1. Remove the chassis hood (19.1).

2. Position the computer so that the front is facing you.

3. Remove the three ribbon cables from the disk controller board (40 pin, 34 pin and 20 pin).

4. Remove the power connector from the disk controller board.

5. Remove the three screws that secure the disk controller board to the drive shield. Notice that the front left corner of the disk controller board is not secured; instead, there is a black plastic screw inserted in the standoff; this screw should not be removed.

6. Remove the disk controller board.

DISK CONTROLLER BOARD INSTALLATION

1. Position the disk controller board so that the mounting holes in the board are aligned with the standoffs on the drive shield.

2. Insert screws in three of the mounting holes and tighten them.

3. Replace the three ribbon cables (40 pin on J5, 34 pin on J7 and 20 pin on J2).

4. Replace the power connector.

5. Replace the chassis hood (19.1).

19.3 CRT ASSEMBLY

ADJUSTMENTS

The KAYPRO 16 uses a CRT assembly produced by Elston Electronics Corp. Even though other models of Kaypro computers use CRT assemblies made by Elston, they are not interchangeable, since the circuitry on the video board is different.

The adjustment points on the KAYPRO 16 video board are in the same position as those on the Elston CRT used in other Kaypro computers.

Refer to pages 7—1 and 7—2 in the Kaypro Technical Manual for adjustment procedures of this CRT assembly. The figure (7.2, Elston video board) on page 7--1 should be used to reference the adjustment points on the video board.

19.33 CRT REMOVAL

1. Remove the chassis hood (19.1).

2. Remove the board assembly (19.23).

3. With the rear of the computer facing you, remove the diagonal brace on the front, right side.

4. Position the computer so that the left side (the side with the drives) is on the work surface.

5. Remove three of the four screws that secure the video board and the bottom of the chassis (the black screws on the outside of the chassis).

6. Support the video board as the last screw is removed.

7. Position the computer so that the bottom is on the work surface.

8. Remove the video connector from the rear of the video board.

9. Remove the bottom two screws that attach the CRT to the front of the chassis.

1Ø. Support the bottom of the CRT and remove the top two screws from the chassis.

11. Remove the CRT assembly from the chassis.

CRT ASSEMBLY INSTALLATION

Note: Before starting with CRT installation, check to see if there are small plastic standoffs attached to the bottom of the video board. If not, use the ones from the old board.

1. Position the CRT assembly in the chassis so that the mounting holes on the front of the CRT are aligned with those on the chassis.

2. Support the bottom of the CRT and insert two screws in the top mounting holes. Partially tighten these screws.

3. Insert two screws in the bottom mounting holes of the CRT. Tighten these.

4. Tighten the top two screws completely.

5. Support the video board while positioning the computer so that the left side (the side with the drives) is on the work surface.

6. Insert four screws in the mounting holes on the chassis and into the standoffs on the bottom of the video board. Tighten these.

7. Position the computer so that the bottom is on the work surface.

8. Replace the video connector on the rear of the video board.

9. Replace the board assembly (19.23).

1Ø. Replace the chassis hood (19.1).

19.4 POWER SUPPLY

The power supply used in the KAYPRO 16 is an 85 Watt switching type made by either Boschert or Calif D.C. These power supplies are not interchangeable with the power supplies used in other models of KAYPRO computers.

Two fuses are associated with each computer. F1 (2A, 250 VAC) is located on the rear of the chassis and is accessible from outside the computer. The other fuse is located on the power supply board. The Boschert uses a 3A, 250VAC and the Calif D.C. uses a 5A, 250VAC fuse. If it's necessary to change a fuse, make sure the new one is the same size as the one being replaced and that the AC power has been disconnected from the computer. Use of a fuse replacement tool is recommended when changing the fuse on the power supply board due to the difficulty of reaching this component.

There are no authorized dealer repairs on any power supplies. The ONLY authorized dealer service to power supplies is 220V configuration.

220V CONFIGURATION

Boschert Power Supply

Identified by the name "Boschert" on the component side of the board.

Locate the four-inch wire jumper that is soldered to point JP1. For 110V configuration the other end of the wire is attached to point E1.

For 220V configuration, remove the wire from point E1 and attach it to point E2. The wire jumper now connects point JP1 and point E2, and the power supply is configured for 220V use.

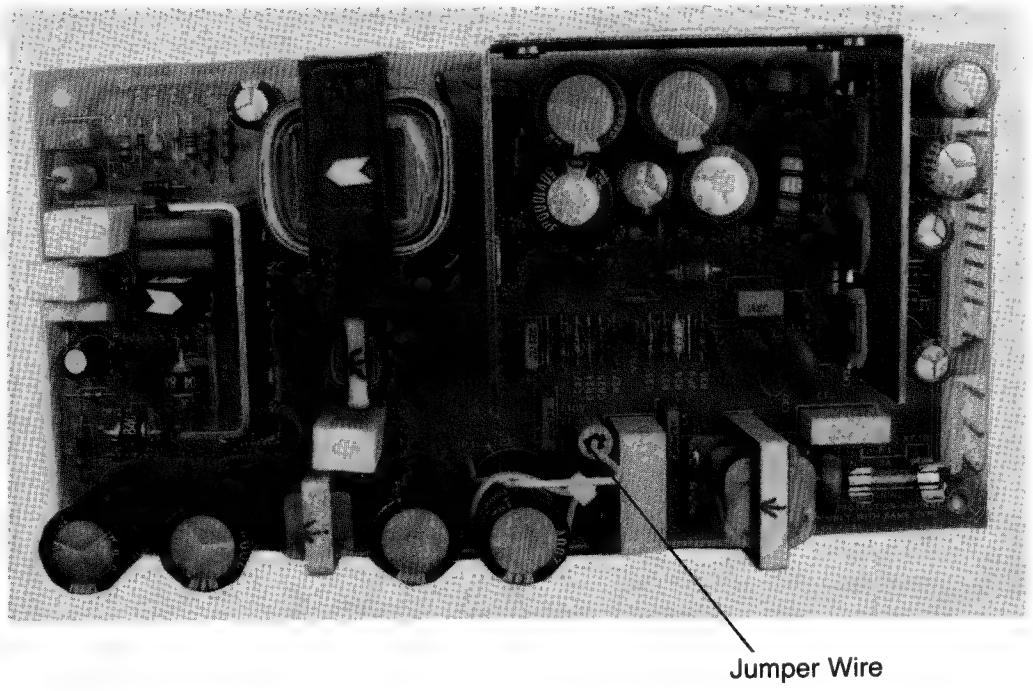

Figure 19.23
Boschert Power Supply

220V CONFIGURATION

Calif D.C. Power Supply

Identified by the name "Calif D.C." on the component side of the board.

Locate a jumper block labeled 115VAC and 230VAC. With the jumper in the 115VAC position, the power supply is configured for 110V.

For 220V use, remove the jumper from the socket labeled 115VAC and place it in the socket labeled 230VAC. The power supply is now configured for 220V use.

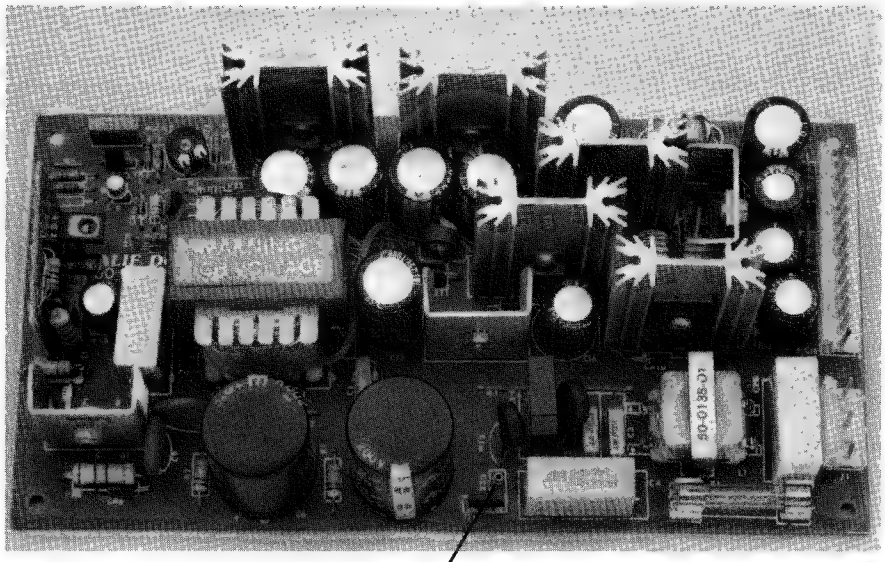

Figure 19.3
Calif D.C. Power Supply

19.43 POWER SUPPLY REMOVAL

1. Remove the chassis hood (19.1).

2. Remove the board assembly (19.23).

3. Position the computer so that the rear of it is facing you.

4. Set the computer so that the left side (the side with the drives) is on the work surface.

5. From outside the chassis, remove the four screws that connect the power supply shield and the bottom of the chassis.

6. Remove the power plug from the power supply.

7. Remove the power supply (with the shield still attached) from the chassis.

8. Remove the five screws that connect the power supply and the power supply shield.

9. Refer to figure 19.33.

1Ø. Remove the power supply from the shield by depressing the sides of the four plastic standoffs and lifting the power supply off the shield.

POWER SUPPLY INSTALLATION

1. Position the power supply on the power supply shield so that the mounting holes on the power supply are aligned with the standoffs on the shield.

2. Press the power supply onto the shield with even pressure until the power supply is firmly seated on the shield.

3. Replace the five screws that attach the power supply and the shield.

4. Set the power supply (with the shield attached) in the chassis so that the mounting holes in the bottom of the shield are aligned with the mounting holes in the bottom of the chassis.

5. Insert four screws through the bottom of the chassis and into the mounting holes of the shield.

6. Tighten the screws securely.

7. Replace the power connector.

8. Replace the board assembly (19.23).

9. Replace the chassis hood (19.1).

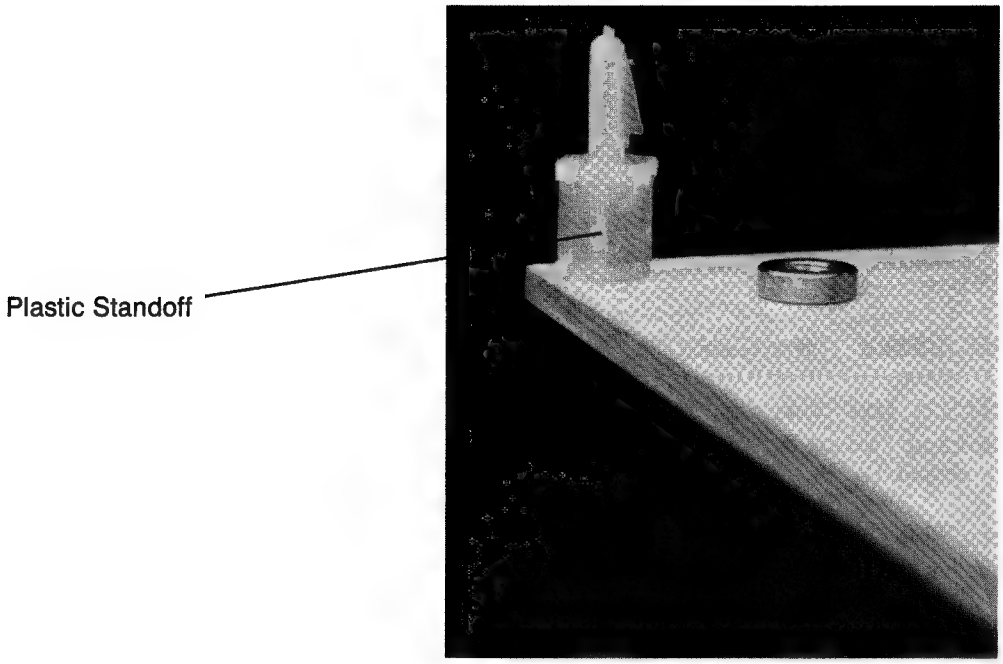

Figure 19.33
Plastic Standoff

19.5 DISKETTE DRIVES

The KAYPRO 16 comes equipped with one of four brands of diskette drive; Epson, Shugart, Tokyo Electric, or Toshiba. These drives are all functionally the same as the drives used in other models of Kaypro computers.

Illustrations of the different drives are on pages 9--2 and 9--3 of the Technical Manual and should be used for reference.

All of the diskette drives used in the KAYPRO 16 are jumpered the same as the drives used for the B drive in other models of Kaypro computers. Refer to the diagrams on pages 9--5 through 9--8 of the Technical Manual and use the instructions for jumpering the B drive.

19.53 DISKETTE DRIVE REMOVAL

Note: The diskette drive and the hard disk drive are both housed in a single drive shield, making it necessary to remove both drives and the shield as one unit. The shield is composed of several individual pieces; figures 19.4 and 19.43 should be used for reference.

1. Remove the chassis hood (19.1).

2. Remove the board assembly (19.23).

3. Remove the disk controller board (19.26).

4. Remove the 34-pin ribbon cable, the power plug and the ground wire from the diskette drive.

5. Remove the 2 ribbon cables, the power plug, and the ground wire from the hard disk drive.

6. Remove the wire from the 10MB LED (gently pull it away from the LED).

7. Position the computer so that the rear of it is on the work surface and the bottom is facing you.

8. Remove the top three screws that secure the drive shield and the chassis.

9. Support the drives while removing the bottom three screws that secure the drive shield and the chassis.

10. Remove the drive assembly unit from the chassis.

Note: To remove the diskette drive from the drive shield unit, six screws need to be removed. Two on top of the shield, two on the side and two on the bottom.

11. Remove the two screws that attach the top of the drive and the drive shield. Refer to figure 19.4.

12. Remove the two screws on the side of the drive shield. Refer to figure 19.4.

13. Remove the two screws that attach the bottom of the drive and the drive shield.

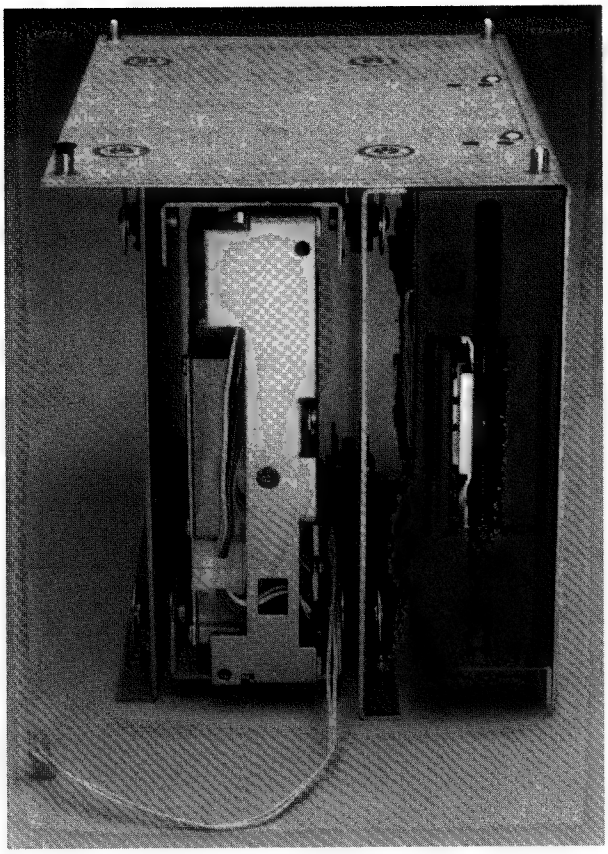

Figure 19.4
Drive Assembly Unit

DISKETTE DRIVE INSTALLATION

Note: Before installing a diskette drive, check to see if it's jumpered correctly.

1. Position the drive so that the drive shield and the mounting holes in the bottom of the drive are aligned.

2. Insert two screws through the shield and into the mounting holes and tighten securely.

3. Insert two screws through the top of the drive shield and into the top mounting holes of the drive and tighten.

4. Insert two screws through the side of the shield and into the shield that's attached to the bottom of the drive.

5. Position the drive assembly unit inside the chassis so that the mounting holes in the bottom of the shield are aligned with the mounting holes in the bottom of the chassis.

6. Insert six screws into the mounting holes on the bottom of the chassis and into the bottom of the shield. Tighten these securely.

7. Replace the ribbon cables, power plugs and the ground wires on the rear of the drives.

8. Replace the disk controller board (19.26).

9. Replace the board assembly (19.23).

1Ø. Replace the chassis hood (19.1).

Figure 19.43
Diskette Drive Shield

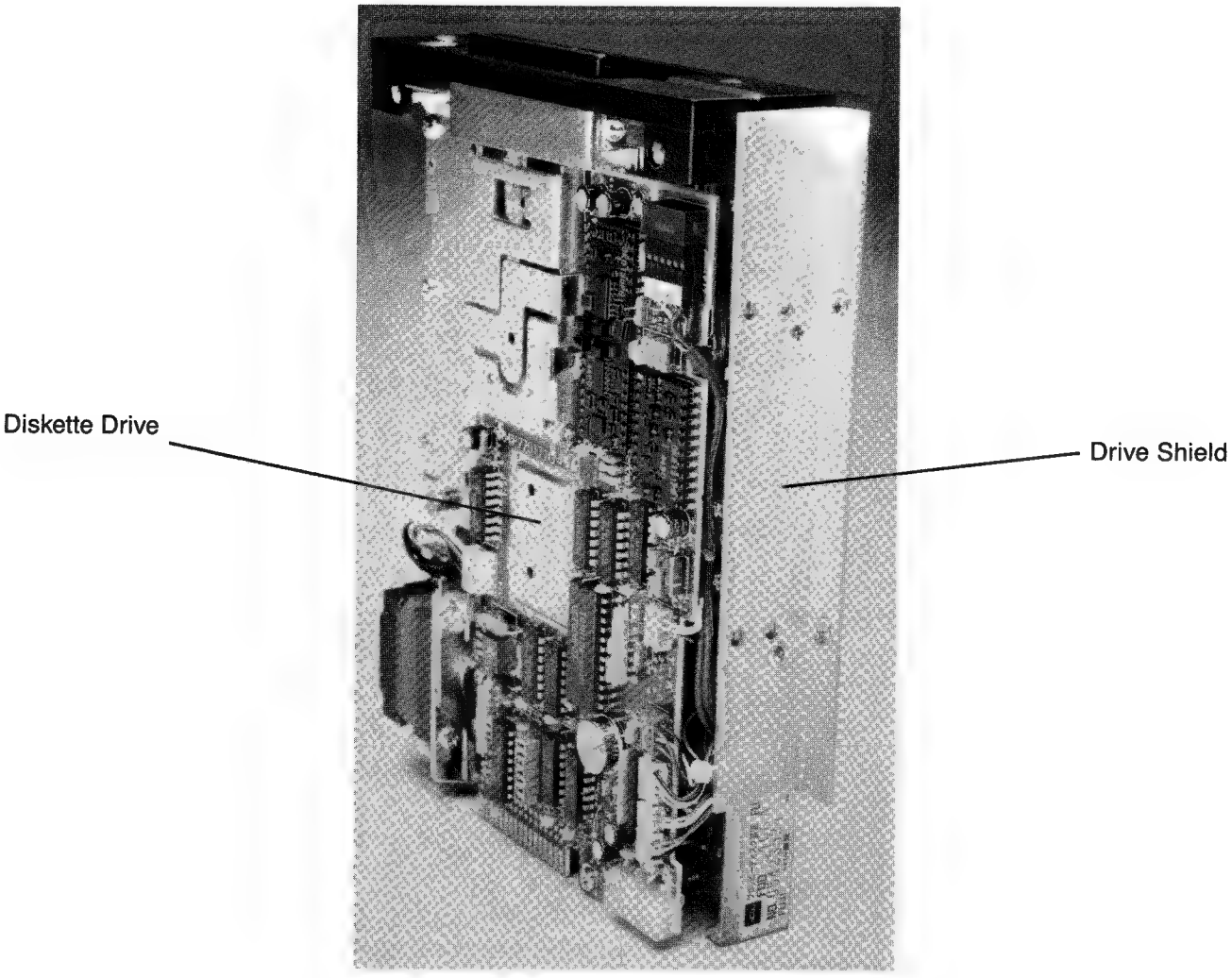

Figure 19.5
Diskette Drive Shield

19.6 HARD DISK DRIVE

The KAYPRO 16 uses hard disk drives manufactured by either Seagate, Microscience, or Shugart. These are functionally the same as the hard drives used in the KAYPRO 10.

Refer to pages 10--1 to 10--3.1 in the Technical Manual for jumpering instructions for the hard drives. These drives should be jumpered the same as the hard disk drives used in the KAYPRO 10.

19.63 HARD DISK DRIVE REMOVAL

Note: The diskette drive and the hard disk drive are both housed in a single drive shield, making it necessary to remove both drives and the shield as one unit. The shield is composed of several individual pieces; figures 19.4, 19.6 and 19.63 should be used for reference. This unit will be referred to as the drive assembly unit in the instructions for removing and installing drives.

1. Remove the chassis hood (19.1).

2. Remove the board assembly (19.23).

3. Remove the disk controller board (19.26).

4. Remove the 34-pin ribbon cable, the power plug and the ground wire from the diskette drive.

5. Remove the 2 ribbon cables, the power plug, the ground wire and the wire from the 10MB LED from the hard drive.

6. Position the computer so that the rear of it is on the work surface and the bottom is facing you.

7. Remove the top three screws that secure the drive shield and the chassis.

8. Support the drives and remove the bottom three screws that secure the drive shield and the chassis.

9. Remove the drive assembly unit from the chassis.

10. Remove four screws from the top of the drive assembly unit. Refer to figure 19.4.

11. Remove the hard drive (still in its shield) from the drive assembly unit.

12. Remove the four mounting screws from the hard drive shield (two on the top and two on the bottom).

Note: The screw used in the top, front mounting hole is shorter than the other screws and must be used in the same mounting hole when installing a new hard drive.

13. Remove the hard drive from the drive shield.

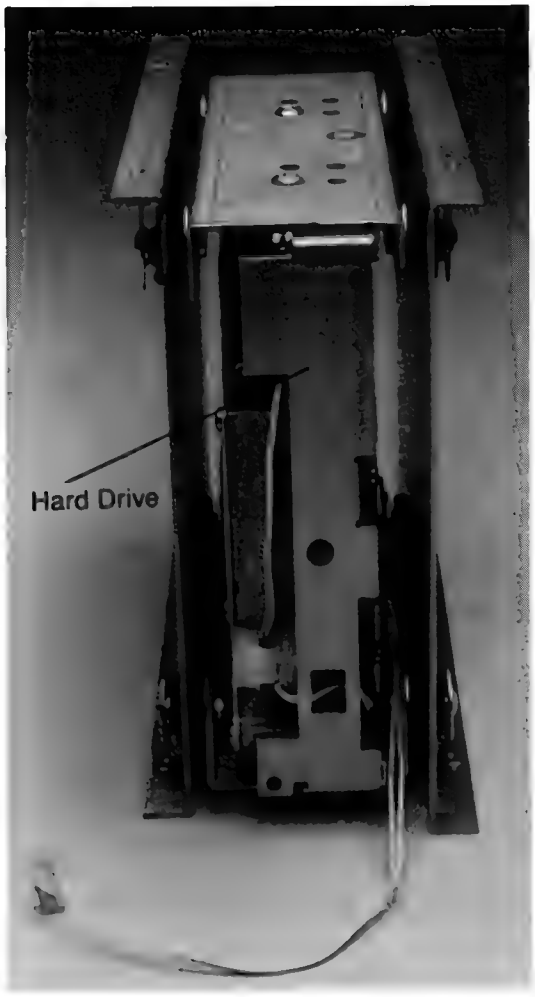

Figure 19.6
Hard Drive in Drive Shield

Figure 19.63
Hard Drive Shield

HARD DISK DRIVE INSTALLATION

1. Check the new hard drive to see if it's jumpered correctly.

2. Position the disk drive in the drive shield so that the mounting holes in the drive are aligned with those in the shield.

3. Insert two screws in the top mounting holes (the short screw is used in the top front mounting hole).

4. Insert two screws in the bottom two mounting holes and tighten these and the top two screws securely.

5. Position the drive assembly unit so that the mounting holes are aligned with the mounting holes in the hard drive shield. Refer to figure 19.4.

6. Insert four screws through the mounting holes of the drive assembly unit and into the hard drive shield. Tighten the screws.

7. Position the drive assembly unit inside the chassis so that the mounting holes in the drive shield are aligned with those in the bottom of the chassis.

8. Insert six screws through the bottom of the chassis and into the drive shield. Tighten the screws.

9. Connect the 1ØMB LED wire from the hard drive to the LED.

1Ø. Replace the disk controller board (19.26).

11. Replace the board assembly (19.23).

12. Replace the two ribbon cables, power plug and the ground wire on the hard drive.

13. Replace the 34-pin ribbon cable, the power plug and the ground wire on the diskette drive.

14. Replace the chassis hood (19.1).

19.7 KEYBOARD

The keyboard has a five pin DIN connector with the following keyboard interface signals:

DIN	SIGNAL NAME
1	KEYBOARD CLOCK
2	KEYBOARD SERIAL DATA
3	RESET
4	GROUND
5	+5VDC

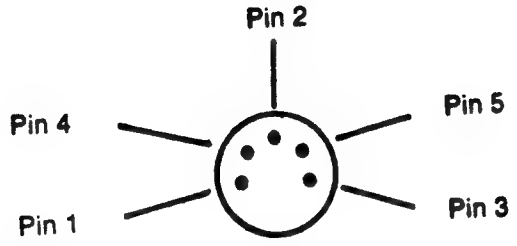

Figure 19.7
DIN Connector

19.8 SYSTEM I/O

The KAYPRO 16 supports parallel and serial I/O operations through its DB-25 (parallel) and either DE-9S or DE-9P (serial) connectors. These are located on the left side of the machine and can be referenced using figure 19.73.

The pin assignments for the parallel and serial ports and cable pin-outs are on the following pages. Notice that although a serial printer and an external modem both use the serial port, they require different cables. If a serial plotter is used with a KAYPRO 16, a serial printer cable should be used.

19.81 PARALLEL PRINTER

PARALLEL PRINTER CABLE

DB-25 CONNECTOR (KAYPRO 16) PIN	SIGNAL	CENTRONICS (PRINTER) PIN
1	/STROBE	1
2	DATA Ø	2
3	DATA 1	3
4	DATA 2	4
5	DATA 3	5
6	DATA 4	6
7	DATA 5	7
8	DATA 6	8
9	DATA 7	9
1Ø	ACKNOWLEDGE	1Ø
11	BUSY	11
12	PAPER END	12
13	SELECT	13
14	AUTO FEED	14
15	FAULT	32
16	/INITIATE	31
17	SELECT IN	36
18	GROUND	19
19	GROUND	2Ø
2Ø	GROUND	21
21	GROUND	23
22	GROUND	25
23	GROUND	27
24	GROUND	29
25	GROUND	3Ø
N/C	SHIELD	17

NOTE: ALL CABLES USED ON THE KAYPRO 16 MUST BE SHIELDED IN ORDER TO COMPLY WITH FCC REGULATIONS.

/ indicates an active low signal.

19.82 I/O CONNECTORS

The following figure should be used as reference for the I/O interface between the KAYPRO 16 computer and any peripherals used with it. The figure also references the reset button.

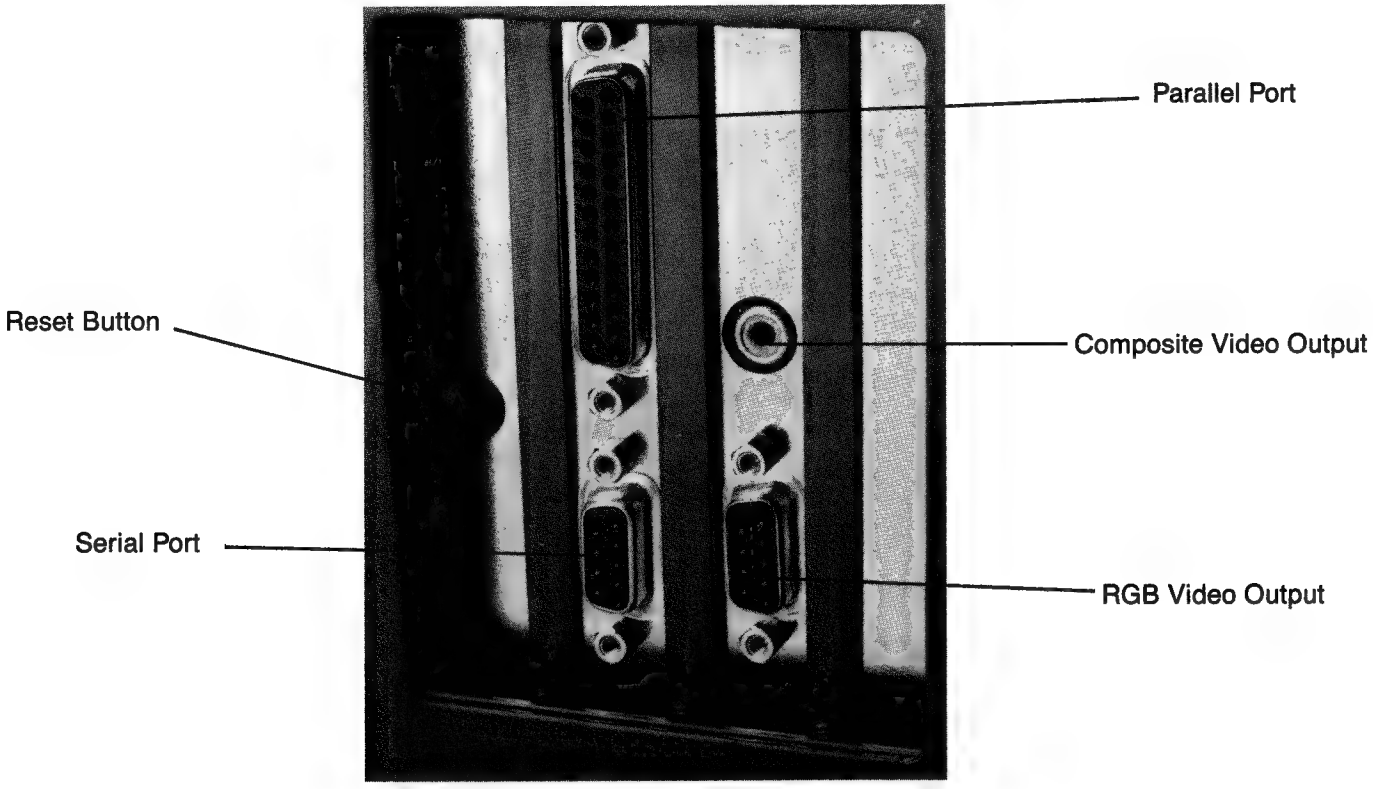

Figure 19.73
I/O Connectors

19.83 SERIAL DEVICES

The serial port pin-out assignments on the KAYPRO 16 are implemented in two different manners. These are easily distinguished from each other by the connector itself; one is a DE-9S female connector, the other a DE-9P male connector. Since the pin-outs are different, two sets of serial port assignments are given for reference. Be sure to check the connector type before using the following information.

19.84 DE-9S SERIAL PORT

THESE SERIAL PORT PIN ASSIGNMENTS SHOULD BE USED FOR KAYPRO 16 COMPUTERS WITH DE-9S CONNECTORS ONLY.

KAYPRO 16 SERIAL PORT PIN ASSIGNMENTS
(PRIMARY ASYNCHRONOUS COMMUNICATIONS)

DE-9S CONNECTOR PIN	SIGNAL
1	DATA SET READY
2	TRANSMIT DATA
3	CLEAR TO SEND
4	RECEIVE DATA
5	SIGNAL GROUND
6	DATA TERMINAL READY
7	CARRIER DETECT
8	REQUEST TO SEND
9	RING DETECT

19.85 SERIAL PRINTER CABLE (DCE)

DE-9P CONNECTOR (KAYPRO) PIN	SIGNAL	DB-25P CONNECTOR (PRINTER) PIN
1	DATA SET READY	20
2	TRANSMIT DATA	3
3	CLEAR TO SEND	4
4	RECEIVE DATA	2
5	SIGNAL GROUND	7
6	DATA TERMINAL READY	8
7	CARRIER DETECT	6
8	REQUEST TO SEND	5
9	RING INDICATOR	22

19.86 MODEM CABLE (DTE)

DE-9P CONNECTOR (KAYPRO) PIN	SIGNAL	DB-25P CONNECTOR (MODEM) PIN
1	DATA SET READY	6
2	TRANSMIT DATA	2
3	CLEAR TO SEND	5
4	RECEIVE DATA	3
5	SIGNAL GROUND	7
6	DATA TERMINAL READY	20
7	CARRIER DETECT	8
8	REQUEST TO SEND	4
9	RING DETECT	22

19.87 DE-9P SERIAL PORT

THESE SERIAL PORT PIN ASSIGNMENTS SHOULD BE USED FOR KAYPRO 16 COMPUTERS WITH DE-9P CONNECTORS.

KAYPRO 16 SERIAL PORT PIN ASSIGNMENTS
(PRIMARY ASYNCHRONOUS COMMUNICATIONS)

DE-9P CONNECTOR PIN	SIGNAL
1	CARRIER DETECT
2	RECEIVE DATA
3	TRANSMIT DATA
4	DATA TERMINAL READY
5	SIGNAL GROUND
6	DATA SET READY
7	REQUEST TO SEND
8	CLEAR TO SEND
9	RING INDICATOR

19.88 SERIAL PRINTER CABLE (DCE)

DE-9S CONNECTOR (KAYPRO) PIN	SIGNAL	DB-25P CONNECTOR (PRINTER)
1	CARRIER DETECT	6
2	RECEIVE DATA	2
3	TRANSMIT DATA	3
4	DATA TERMINAL READY	8
5	SIGNAL GROUND	7
6	DATA SET READY	20
7	REQUEST TO SEND	5
8	CLEAR TO SEND	4
9	RING INDICATOR	22

19.89 MODEM CABLE (DTE)

DE-9S CONNECTOR (KAYPRO) PIN	SIGNAL	DB-25P CONNECTOR (MODEM)
1	CARRIER DETECT	8
2	RECEIVE DATA	3
3	TRANSMIT DATA	2
4	DATA TERMINAL READY	20
5	SIGNAL GROUND	7
6	DATA SET READY	6
7	REQUEST TO SEND	4
8	CLEAR TO SEND	5
9	RING DETECT	22

19.9 VIDEO CONNECTOR FOR EXTERNAL RGB MONITOR

PIN ASSIGNMENTS

1. GROUND
2. GROUND
3. RED INPUT
4. GREEN INPUT
5. BLUE INPUT
6. INTENSITY
7. NO CONNECTION
8. HORIZONTAL SYNC
9. VERTICAL SYNC

19.91 VIDEO CONNECTOR FOR COMPOSITE VIDEO MONITOR

This connector uses a standard composite video cable.

19.92 I/O PORT ADDRESSES

PORT # (HEX)	DEVICE/FUNCTION
000-00F	DMA Chip 8237A-5
020-021	Interrupt 8259A
040-043	Timer 8253-5
060-063	PPI 8255A-5
080-083	DMA Page Registers
0A0-0AF	NMI Mask Register
2F8-2FF	Asynchronous Communications (Secondary)
320-32F	Hard Disk
378-37F	Parallel Printer
3D0-3DF	Color/Graphics
3F0-3F7	Floppy Diskette
3F8-3FF	Asynchronous Communications (Primary)

19.93 MEMORY MAP OF THE KAYPRO 16 COMPUTER

MEMORY MAP OF THE KAYPRO 16 COMPUTER

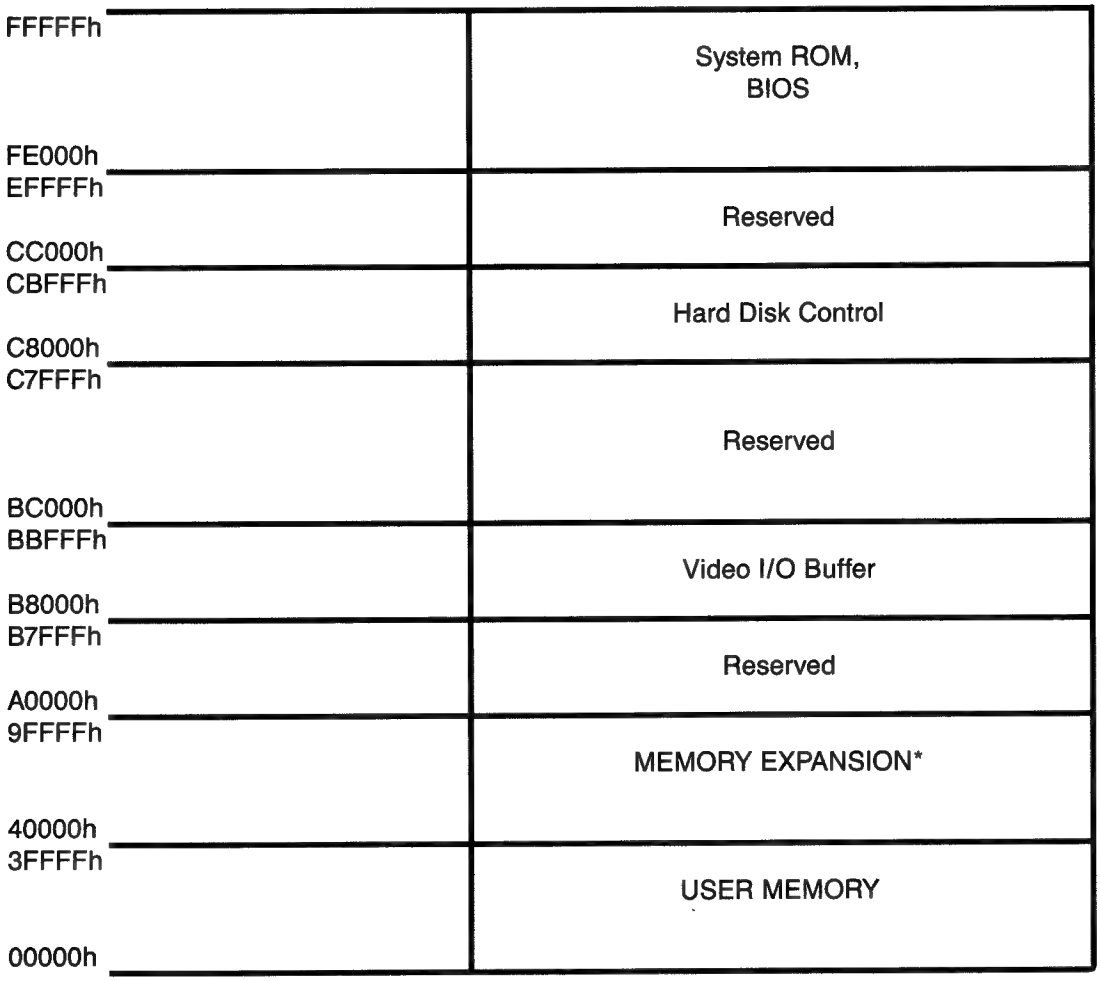

* AVAILABLE AS AN OPTION

19.94 SWITCH SETTINGS

The KAYPRO 16 uses several DIP switches that are preset at the factory. The switches and their functions are in this section for reference and as an aid in troubleshooting, check to see if they're in the proper position before replacing a card. Notice that there are two DIP switches labeled "SW1", but that they're on different cards.

SW1 on the PROCESSOR CARD:

Position 1 is used to specify the numeric processor option.
Positions 2 and 3 are used to specify the size and type of display interface.
Positions 4 and 5 are used to specify the number of disk drives.

The settings for SW1 on the processor card are:

Position 1 is on.
Position 2 is off.
Position 3 is on.
Position 4 is on.
Position 5 is on.

SW1 on the FLOPPY-RAM-I/O CARD:

Positions 1, 2, 3, and 4 are used to specify the starting address for the RAM on the FLOPPY-RAM-I/O card (the memory expansion).
Positions 5 and 6 indicate the number of RAM banks on the FLOPPY-RAM-I/O card.
Position 7 is used to specify whether those banks contain 64K or 256K.
Position 8 is used to enable or disable parity checking.

The settings for SW1 on the FLOPPY-RAM-I/O card are:

	256K
Position 1 is off.	—
Position 2 is on.	—
Position 3 is on.	—
Position 4 is on.	—
Position 5 is on.	—
Position 6 is off.	ON
Position 7 is on.	ON
Position 8 is on.	

SW2 on the FLOPPY-RAM-I/O card:

Positions 1 and 2 are used to select the serial port.
Positions 3 and 4 are used to select the parallel port.

The settings for SW2 on the FLOPPY-RAM-I/O card are:

Position 1 is on.
Position 2 is on.
Position 3 is on.
Position 4 is off.

Serial Port Select

This jumper is located on the FLOPPY-RAM-I/O card and can be referenced using figure 19.8. It should be set in the "COM1" position.

Parallel Port Select

This jumper is located on the FLOPPY-RAM-I/O card and can be referenced using figure 19.8. It should be set in the "IRQ7" position.

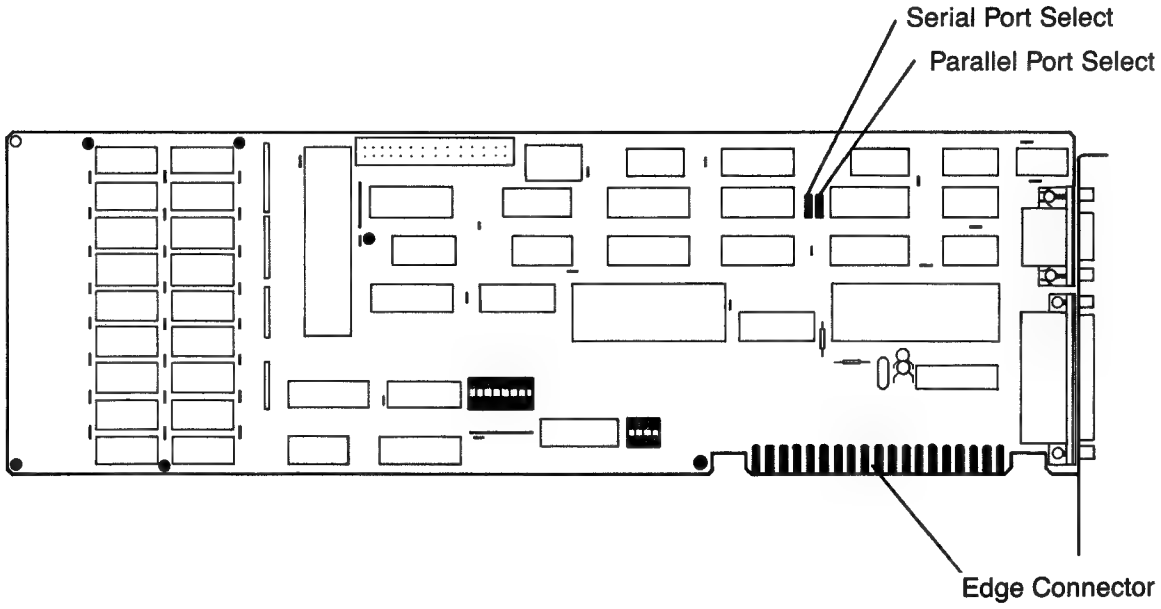

Figure 19.8
Floppy-RAM-I/O Card

19.95 MEMORY EXPANSION

The mainboard on the KAYPRO 16 is populated with 256K bytes of RAM and is socketed for an additional 256K bytes. By populating the additional 256K RAM on the mainboard, the total dealer serviceable memory expansion is completed. The additional 256K bytes of RAM on the mainboard can be implemented by populating the sockets with 64K x 1, 150ns, RAM chips. The additional RAM chips need to be installed in these positions: U37-U45, U46-U54, U55-U63, U64-U72.

The RAM expansion from 512K to 640K is a "factory only upgrade". Kaypro does not support memory expansion from 512K to 640K unless it is done at Kaypro.

20.0 KAYPRO 16/2

The KAYPRO 16/2 is an Intel 8088 microprocessor based computer that is similar in many ways to the KAYPRO 16 computer. Because of these similarities, Section 19 in the Technical Manual is used as a reference for the KAYPRO 16/2. The KAYPRO 16/2 is equipped with two double-density, double-sided disk drives providing 360K of storage per diskette. This is the main difference between the KAYPRO 16/2 and the KAYPRO 16.

The three cards that are used in the KAYPRO 16/2 are the same as those used in the KAYPRO 16 with one exception: SW1 on the processor card is set differently.

The settings for SW1 on the processor card are:
Position 1 is on.
Position 2 is off.
Position 3 is on.
Position 4 is on.
Position 5 is off.

The mainboard is the same with these exceptions: J1, U73, U74, U77, U78, U79, U80, U81, U82, U91, U95, U96 and U97 are deleted.

The keyboard, CRT assembly, power supply and fan are the same as those used in the KAYPRO 16.

Refer to Section 19 in the Technical Manual for adjustment procedures, removal/replacement of components and information regarding the following topics for the KAYPRO 16/2:

CHASSIS HOOD REMOVAL/REPLACEMENT	19--3
SYSTEM BOARDS	19--4
IC LIST, KAYPRO 16	19--4.1
BOARD ASSEMBLY REMOVAL/REPLACEMENT	19--16
CARD REMOVAL/REPLACEMENT	19--18
MAINBOARD REMOVAL/REPLACEMENT	19--21
CRT ASSEMBLY ADJUSTMENTS	19--23
CRT REMOVAL/REPLACEMENT	19--24
POWER SUPPLY	19--26
220V CONFIGURATION	19--27
POWER SUPPLY REMOVAL/REPLACEMENT	19--29
KEYBOARD	19--41
PARALLEL PORT	19--42
I/O CONNECTORS	19--43
SERIAL PORT	19--44
EXTERNAL VIDEO MONITORS	19--47

DISKETTE DRIVES

The diskette drives in the KAYPRO 16/2 are the same double-density, double-sided drives used in other models of Kaypro computers. The brands that are currently being used are Epson, Shugart, Tokyo Electric and Toshiba. These drives are all functionally the same and therefore interchangeable.

Refer to the illustrations of the drives on pages 9--2 through 9--8 of the Technical Manual for identification and jumpering instructions.

The diskette drives used in the KAYPRO 16/2 are both jumpered using the instructions for jumpering the B drive, with one exception; the drive in the B position needs a terminating resistor and the drive in the A position does not. The B drive is the drive farthest from the CRT assembly and is the last drive on the ribbon cable.

DISKETTE DRIVE REMOVAL

1. Follow the instructions on page 19--3 of the Technical Manual and remove the chassis hood.

2. Remove the 34-pin ribbon cable, the power plug and the ground wire from the diskette drive.

3. Position the computer so that the rear of it is on the work surface and the bottom is facing you.

4. Remove three of the four screws that attach the drive shield and the bottom of the chassis.

5. Support the drives while removing the final screw that attaches the drive shield and the chassis.

6. Remove the two diagonal braces from the side of the chassis.

7. Remove the drive shield unit (the drives are still attached) from the chassis.

8. Remove the four screws that attach the bottom of the drives to the drive shield. Remove this portion of the drive shield.

9. There are two screws that attach each drive to the drive shield. Remove the two screws that attach the drive being replaced and the drive shield.

10. Remove the drive from the drive shield.

DISKETTE DRIVE REPLACEMENT

For diskette drive replacement, verify that the drive is jumpered correctly and reverse the preceding instructions.

Note: The ribbon cable has two twists in it for wires 10 through 16. A standard point to point cable will not work.

21.Ø KAYPRO 286i

21.1 Description

The KAYPRO 286i computer is based on the Intel 8Ø286 16-bit microprocessor. It operates at a clock frequency of 6 MHz resulting in a clock cycle time of 167 nanoseconds. The 8Ø286 supports 16-bit data transfers and can address up to 15 megabytes of physical memory. It also supports 1 gigabyte of virtual memory per task, mapped into a 15 megabyte physical address space.

The 8Ø286 operates in conjunction with several support components: 8259A-2, 8254-2, 8237A-5, 82288, and 82284. The KAYPRO 286i uses two 8259A-2 programmable interrupt controllers to provide 16 levels of priority for vectored interrupt control.

The function of the 8254-2 programmable interval timer is to control the system timers. The 8254-2 is treated by systems software as an array of four I/O ports: 3 are treated as counters, the fourth is a control register for mode programming. Two 8237A-5 DMA controllers are designed to allow external devices to directly transfer data from the system memory. They also provide memory-to-memory transfer capabilities. Commands and control for the local and system bus are provided by the 82288 bus controller. It also provides address latch control, data transceiver control and command outputs. The 82284 clock generator is responsible for the clock, ready, and reset signals required by the 8Ø286 and its support components.

The system board is socketed for and will support the addition of an Intel 8Ø287 numeric processor. The 8Ø287 extends the capabilities of the system by adding floating-point, extended-integer, and BCD data types.

The KAYPRO 286i is populated with 512K bytes of dynamic RAM, (64ØK bytes on the KAYPRO 286i model C), which is implemented using 256K x 1, 15Øns dynamic RAM chips. This can be increased to 64ØK bytes by populating Bank 2 and Bank 3 on the system board with 64K x 1, 15Øns dynamic RAM. By using expansion cards, RAM can be extended to the maximum the system will support, 15M bytes. (See 23.3 MEMORY EXPANSION.)

21.2 FCC INFORMATION

As Kaypro keeps in step with computer technology, the models have changes which affect FCC ratings. The proper rating is affixed to the back of each computer, and the appropriate FCC information is given here.

FCC INFORMATION FOR CLASS A

This equipment generates, uses, and can radiate radio frequency energy and, if not installed and used in accordance with the instruction manual, may cause interference to radio communications. It has been tested and found to comply with the limits for a class A computing device pursuant to subpart J of Part 15 of FCC Rules, which are designed to provide reasonable protection against such interference when operated in a commercial environment. Operation of this equipment in a residential area is likely to cause interference, in which case the user at his own expense will be required to take whatever measures may be required to correct the interference.

If this computer is used with peripheral devices, such as a printer or modem, then well-shielded cables must be used to preserve the radio interference characteristics.

FCC INFORMATION FOR CLASS B

This equipment generates and uses radio frequency energy and, if not installed and used properly, that is, in strict accordance with the manufacturer's instructions, may cause interference to radio and television reception. It has been type-tested and found to comply with the limits for a class B computing device in accordance with the specifications in Subpart J of Part 15 of FCC Rules, which are designed to provide reasonable protection against such interference in a residential installation. However, there is no guarantee that interference will not occur in a particular installation. If this equipment does cause interference to radio or television reception, which can be determined by turning the equipment off and on, the user is encouraged to try to correct the interference by one or more of the following measures:

Reorient the receiving antenna.
Relocate the computer with respect to the receiver.
Move the computer away from the receiver.
Plug the computer into a different outlet so that computer and receiver are on different branch circuits.

If necessary, the user should consult the dealer or an experienced radio/television technician for additional suggestions. The user may find the following booklet prepared by the Federal Communication Commission helpful:

"How to Identify and Resolve Radio-TV Interference Problems". This booklet is available from the U. S. Government Printing Office, Washington, DC 20402, Stock No. 004-000-00345-4.

21.3 KAYPRO 286i MODEL A SPECIFICATIONS

CPU:	80286 microprocessor, 6.0 MHz clock; socket for 80287 math co-processor.
ROM:	32 KB; includes automatic self test of system on power up.
RAM:	512 KB standard; expandable to 640 KB on the mainboard; expandable to 15 MB with installation of additional boards.
DISK STORAGE:	One double-sided, high-density floppy diskette drive; 1.2 MB of storage.
BOARD EXPANSION:	Eight expansion slots; one is used for the system, leaving seven IBM PC AT compatible slots for user options and workstation growth.
KEYBOARD:	Detachable, 84 keys, IBM PC AT compatible in layout and function keys; may be locked to prevent unauthorized use; bi-directional interface.
COLOR GRAPHICS:	Color graphics may be added with the installation of an additional board.
TIME DEVICES:	Real time clock/calendar with lithium battery back-up; also features three user programmable timers.
SOUND SYSTEM:	Includes speaker to allow user programmable tones.
I/O CONNECTIONS:	IBM PC AT compatible parallel and serial ports may be added with the installation of additional boards.
CASE:	Metal construction; desk-top configuration.
DIMENSIONS:	Length 21 1/4 inches; depth 17 inches; height 6 3/8 inches; weight 38 lbs.
POWER:	115/230 volts, 60/50 cycles.

21.4 KAYPRO 286i MODEL B SPECIFICATIONS

CPU:	80286 microprocessor, 6.0 MHz clock; socket for 80287 math co-processor.
ROM:	32 KB; includes automatic self test of system on power up.
RAM:	512 KB standard; expandable to 640 KB on the mainboard; expandable to 15 MB with installation of additional boards.
DISK STORAGE:	Two double-sided, high-density floppy diskette drives; 1.2 MB of storage each.
BOARD EXPANSION:	Eight expansion slots; three are used for the system, leaving five IBM PC AT compatible slots for user options and workstation growth.
KEYBOARD:	Detachable, 84 keys, IBM PC AT compatible in layout and function keys; may be locked to prevent unauthorized use; bi-directional interface.
COLOR GRAPHICS:	Standard; IBM PC AT compatible; RGB output.
TIME DEVICES:	Real time clock/calendar with lithium battery back-up; also features three user programmable timers.
SOUND SYSTEM:	Includes speaker to allow user programmable tones.
I/O CONNECTIONS:	One parallel port; IBM PC AT compatible. One serial port; IBM PC AT compatible.
CASE:	Metal construction; desk-top configuration.
DIMENSIONS:	Length 21 1/4 inches; depth 17 inches; height 6 3/8 inches; weight 38 lbs.
POWER:	115/230 volts, 60/50 cycles.

21.5 KAYPRO 286i MODEL C SPECIFICATIONS

CPU:	80286 microprocessor, 6.0 MHz clock; socket for 80287 math co-processor.
ROM:	32 KB; includes automatic self test of system on power up.
RAM:	640 KB standard; expandable to 15 MB with installation of additional boards.
DISK STORAGE:	One double-sided, high-density floppy diskette drive; 1.2 MB of storage. One hard disk drive; 20 MB of storage.
BOARD EXPANSION:	Eight expansion slots; two are used for the system, leaving six IBM PC AT compatible slots for user options and workstation growth.
KEYBOARD:	Detachable, 84 keys, IBM PC AT compatible in layout and function keys; may be locked to prevent unauthorized use; bi-directional interface.
COLOR GRAPHICS:	Color graphics may be added with the installation of an additional board.
TIME DEVICES:	Real time clock/calendar with lithium battery back-up; also features three user programmable timers.
SOUND SYSTEM:	Includes speaker to allow user programmable tones.
I/O CONNECTIONS:	One parallel port; IBM PC AT compatible. One serial port; IBM PC AT compatible.
CASE:	Metal construction; desk-top configuration.
DIMENSIONS:	Length 21 1/4 inches; depth 17 inches; height 6 3/8 inches; weight 38 lbs.
POWER:	115/230 volts, 60/50 cycles.

21.6 KAYPRO 286i MODEL D SPECIFICATIONS

CPU:	80286 microprocessor, 6.0 MHz clock; socket for 80287 math co-processor.
ROM:	32 KB; includes automatic self test of system on power up.
RAM:	640 KB standard; expandable to 15 MB with installation of additional boards.
MEDIA STORAGE:	One double-sided, high-density floppy diskette drive; 1.2 MB of storage. One hard disk drive; 20 MB of storage. One 1/4-inch streaming tape cartridge drive.
BOARD EXPANSION:	Eight expansion slots; four are used for the system, leaving four IBM PC AT compatible slots for user options and workstation growth.
KEYBOARD:	Detachable, 84 keys, IBM PC AT compatible in layout and function keys; may be locked to prevent unauthorized use; bi-directional interface.
COLOR GRAPHICS:	Standard; IBM PC AT compatible; RGB output.
TIME DEVICES:	Real time clock/calendar with lithium battery back-up; also features three user programmable timers.
SOUND SYSTEM:	Includes speaker to allow user programmable tones.
I/O CONNECTIONS:	One parallel port; IBM PC AT compatible. One serial port; IBM PC AT compatible.
CASE:	Metal construction; desk-top configuration.
DIMENSIONS:	Length 21 1/4 inches; depth 17 inches; height 6 3/8 inches; weight 38 lbs.
POWER:	115/230 volts, 60/50 cycles.

22.Ø CHASSIS

22.1 CHASSIS COVER REMOVAL

WARNING! The KAYPRO 286i contains static sensitive devices. Make sure that you are grounded before you remove the cover. The preferred method is to have a grounding strap attached to the wrist with the drain lead connected to a common earth ground and to have the computer positioned on a conductive grounded mat. With the above precautions observed, and the power disconnected, one may remove and install components or adapters.

1. Turn off the computer and disconnect AC power by unplugging the power cord from the back of the computer.

2. Disconnect all peripheral cords and cables from the back of the computer (printer cables, modem cable, et cetera).

3. Gently pull the back panel cover from the back of the computer. It is held onto the back panel of the chassis by four Velcro (tm) strips.

4. Remove the five cover mounting screws located on the back of the KAYPRO 286i in each corner and top center (refer to Figure 22-1).

Figure 22-1 Cover Mounting Screws

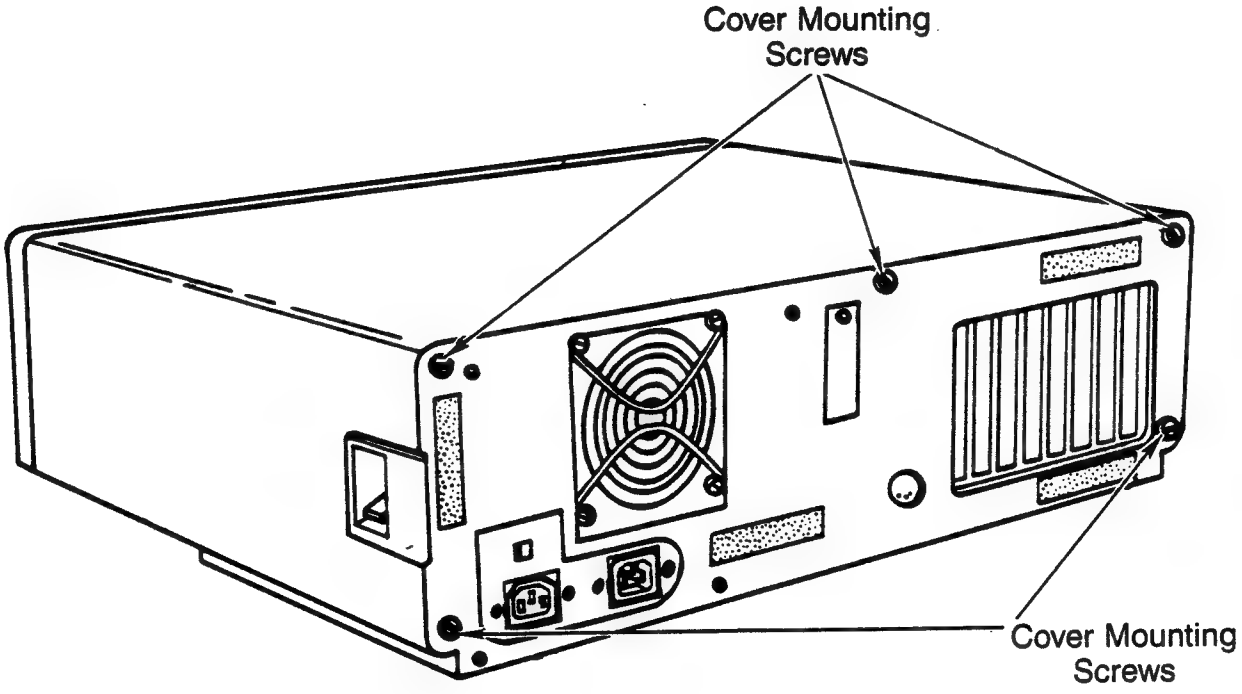

5. Slide the cover toward the front of the computer (refer to figure 22-2). If it sticks, find the obstruction (usually the back corners or the drive mounting clips), and free the cover.

22.2 CHASSIS COVER REPLACEMENT

1. Slide the cover toward the back of the computer until the cover is against the rear panel of the chassis.

2. Replace and tighten the five cover mounting screws.

Figure 22-2 Chassis cover removal

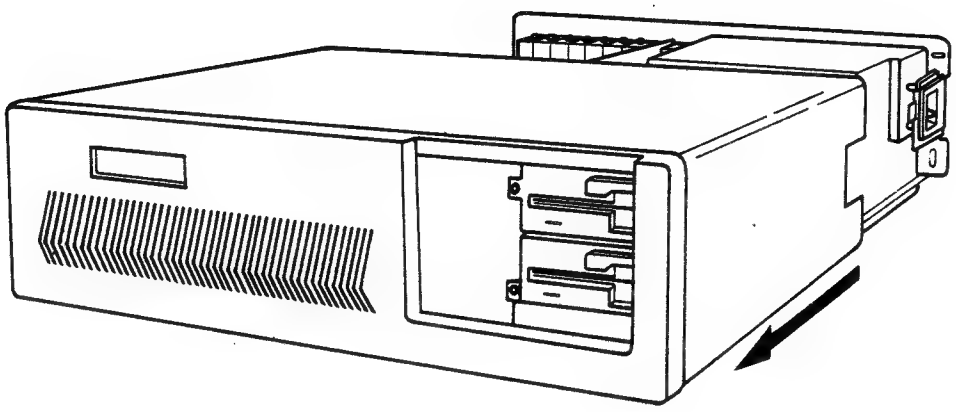

23.Ø SYSTEM BOARDS

The term "System Boards" in this manual is defined as the mainboard plus any adapter cards that make up the standard system for a particular computer.

23.1 Descriptions for different models

KAYPRO 286i MODEL A

The KAYPRO 286i model A system boards include the mainboard with 512K bytes of RAM standard and a combination diskette drive/hard drive controller card.

KAYPRO 286i MODEL B

The KAYPRO 286i model B system boards includes the mainboard with 512K bytes of RAM standard, a combination diskette drive/hard drive controller card, a serial/parallel port card, and a color card.

KAYPRO 286i MODEL C

The KAYPRO 286i model C system boards include the mainboard with 64ØK bytes of RAM standard, a combination diskette drive/hard drive controller card, and a serial/parallel port card..

KAYPRO 286i MODEL D

The KAYPRO 286i model B system boards includes the mainboard with 64ØK bytes of RAM standard, a combination diskette drive/hard drive controller card, a serial/parallel port card, a color card, and a tape drive controller card.

23.2 ADAPTER CARDS

23.21 CONTROLLER CARD

The controller card is a Western Digital 1ØØ2 combination diskette drive/hard drive controller card and is not dealer serviceable.

23.22 COLOR CARD

The color card offers standard graphics resolutions of 32Ø by 2ØØ with four colors or 64Ø by 2ØØ black and white with any IBM compatible RGB monitor.

23.23 TAPE DRIVE CONTROLLER CARD

The tape drive controller card is a Wangtek PC-36 Controller and is not dealer serviceable.

23.24 SERIAL/PARALLEL PORT CARD

The serial/parallel port card consists of two I/O ports. One is a DB-25S connector for use with parallel peripheral devices, and the other is a DE-9S serial connector for serial devices such as modems, plotters, or serial printers. The serial/parallel port card ports are selectable as COM 1 and LPT 1 or COM 2 and LPT 2 by reversing the DIP switch settings or jumpers (J1 and J2) on the card.

23.241 IC LIST

Reference Designation		Description
Serial/Parallel Port Card, 81-623, KAYPRO 286i model B		
U16	PAL 16L8	(81-693)
U12,13	74LSØ4	Hex inverter
U9	74LS125	Tri quad buffer
U1Ø	74LS155	Hex "D" flip-flop
U17	74LS174	Hex "D" flip-flop
U11	74LS24Ø	Octal inverter buffer
U6	74LS244	Tri octal buffer
U18	74LS245	Bi-directional 8-bit buffer
U7	74LS374N	Octal latch
U14	74Ø5	Hex inverter
J1,2	DIP SWITCH	4 pos x 2 selects

23.242 SCHEMATICS: SERIAL/PARALLEL PORT CARD

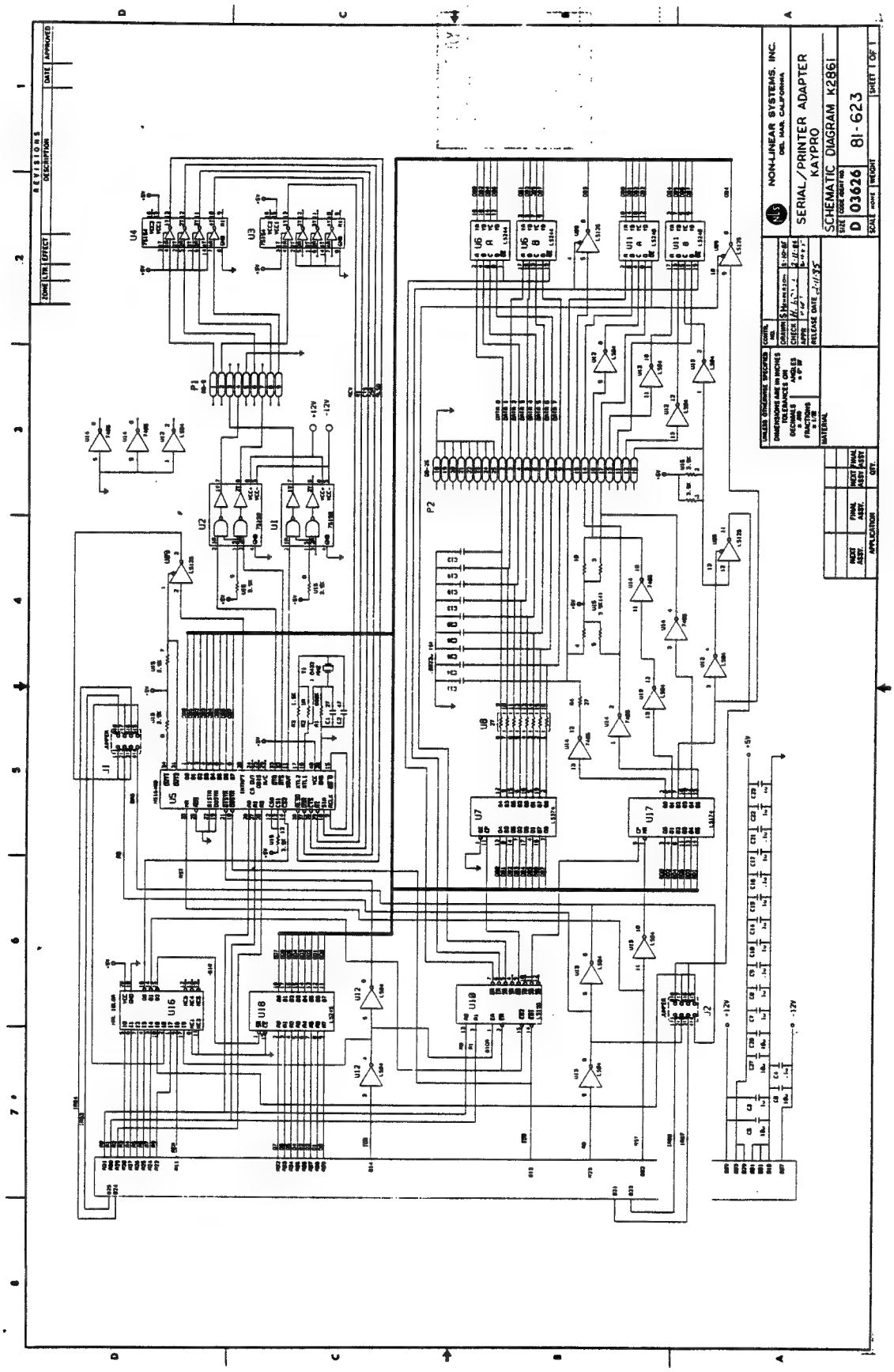

Figure 23-1 Expansion Slot Cover

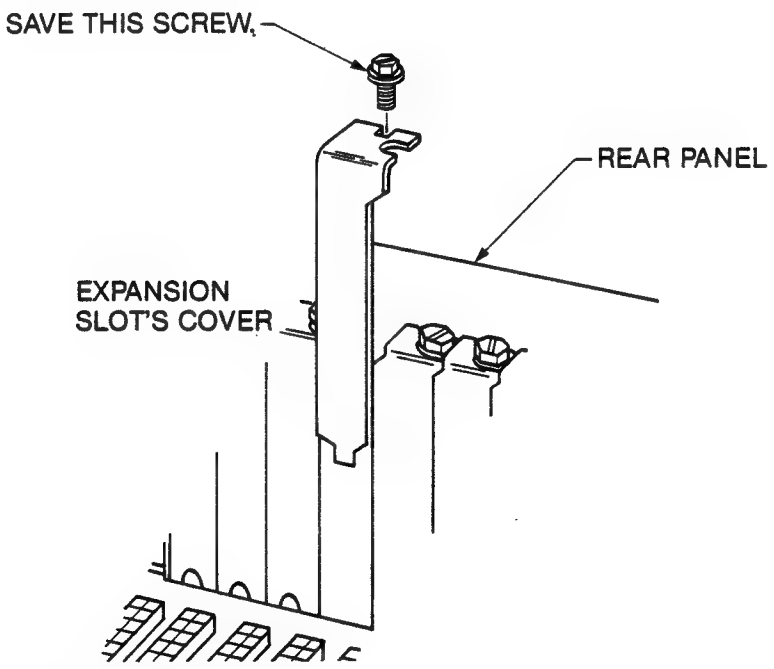

Figure 23-2 Support Bracket

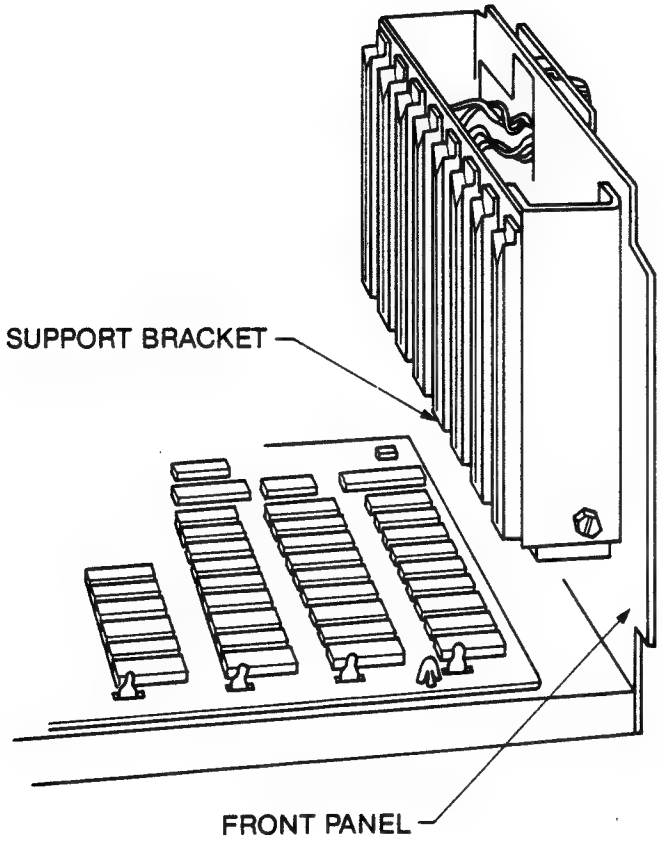

23.25 ADAPTER CARD REMOVAL

WARNING! The KAYPRO 286i contains static sensitive devices. Make sure that you are grounded before you remove the cover. The preferred method is to have a grounding strap attached to the wrist with the drain lead connected to a common earth ground and to have the computer positioned on a conductive grounded mat. With the above precautions observed, and the power disconnected, one may remove and install components or adapters.

Note: All cards that are installed by Kaypro Corporation may be removed, but must be returned to the expansion slots assigned to them.

1. Turn off the computer and disconnect the AC power.

2. Remove the chassis cover (22.1).

3. Remove all cables and connectors that are attached to the card, taking notice of the position of each of these cables and connectors.

4. Remove the screw that secures the card (located toward the rear panel of the computer).

5. Remove the card from the card cage by sliding it upward until the edge connector is separated from the expansion slot receptacle and the card is out of the card cage.

23.26 ADAPTER CARD INSTALLATION

NOTE: Some of the smaller expansion cards may not fit in most slots of the KAYPRO 286i because of an extra tab on the card that hangs down. These cards must be placed in the expansion slots marked J1 and J7, or another compatible card that does fit must be used.

1. If you are installing a new card, remove the expansion slot cover (refer to Figure 23-1).

2. Position the card above the card cage so that the edge connector is above the expansion slot receptacle.

3. Lower the card into the card cage so that the mounting bracket tab fits into the space between the mainboard and the side of the card cage, and the other side of the card slides into the plastic support bracket (refer to Figure 23-2).

4. Press the card until it is firmly seated in the expansion slot receptacle.

5. Replace and tighten the screw that secures the mounting bracket to the card cage.

6. Replace the chassis cover.

7. After installing a new card, it may be necessary to run the "Setup" program.

23.3 MAINBOARD

23.31 Description

The mainboard on the KAYPRO 286i is populated with 512K bytes of RAM (640K bytes on KAYPRO 286i models C and D), and is socketed to allow the memory to be expanded to 640K bytes. To implement the RAM expansion on the system board, see section on "Memory Expansion" below.

80287 MATH CO-PROCESSOR

The KAYPRO 286i mainboard is socketed for and will support the addition of an Intel 80287 math co-processor. The co-processor should be installed in the socket labeled U-62. Position the co-processor so that pin number 1 is towards the front of the computer and is in the left side of the socket.

After the 80287 math co-processor is installed, it will be necessary to run the "Setup" program.

MEMORY EXPANSION

The increase on the system board from 512K bytes to 640K bytes can be increased by populating Bank 2 and Bank 3 on the mainboard with 64K x 1, 150ns dynamic RAM. The increase in system memory is not required before any memory expansion cards are installed, but that 128K of memory must be blocked out.

The memory can be blocked out by installing a jumper between pins 1 and 2 of the RAM Enable/Disable switch (J18) on the mainboard. By using expansion cards, RAM can be extended to the maximum the system will support, which is 15M bytes.

Any time the system memory is increased either by populating the empty banks on the mainboard or installing memory expansion cards, the "Setup" program must be run.

23.32 IC LIST, KAYPRO 286i MAINBOARD

Reference Designation		Description
Mainboard, 81-Ø35 & 81-Ø36 KAYPRO 286i models A and B		
U6, U12	74F28Ø	Parity generator/checker
U49	74F257	Multiplexer
U92, U113	74F174	Hex "D" flip-flop
U1Ø, U114	74F175	Quad "D" flip-flop
U48, U82, U83	74F158	Multiplexer
U18	74F139	Decoder
U59, U77, U129, U137	74F74	Dual "D" flip-flop
U55	74F2Ø	Dual NAND gate
U125	74F11	Triple AND gate
U64, U7Ø, U71, U122, U135	74F1Ø	Triple NAND gate
U69, U91, U134	74FØ8	Quad AND gate
U72	74FØØ	Quad NAND gate
U78, U133	74LS125	Tri quad buffer
U6Ø, U124	74LS51	Dual AND-OR-invert gate
U136	74LSØ2	Quad NOR gate
U87	74LS112	Dual J K flip-flop
U53, U126	74S51	Dual AND-OR-invert gate
U68	74LS646	Octal bus transceiver
U95	74LS612	Memory mapper
U51	74LS59Ø	8-bit binary counter
U132	74LS245	Tri octal transceiver
U1Ø5, U117	8259A-2	Programmable interrupt controller
U1Ø4	8254-2	Programmable interval timer
U96, U1Ø6	8237A-5	DMA controller
U13Ø	82288	Bus controller
U88	82284	Clock
U118	8742	Universal peripheral interface 8-bit microcomputer
U38	8284A	Clock
U8Ø	8Ø286	CPU
U1Ø3	MC14Ø69U	CMOS hex
U116	MC146818P	Real time clock
U127	PAL 16L8A	(81-686)
U111	63SØ81 MMI	(81-689A)
U94	28S42 TI	(81-687C)
U1,2,7,8,13,14,19,2Ø,23,24, 28,29,33,34,39,4Ø,43,44	41256P-15	256K x 1, 15Øns, dynamic RAM
U121	74Ø7	Hex buffer
U56,66,67,84,97,98	74ALS573	Tri octal "D" latch
U5,11,65,73,74,75,76,81	74ALS245	Tri octal transceiver
U5Ø,61,1Ø7	74ALS244	Tri octal buffer
U98	74ALS175	Quad "D" flip-flop
U12Ø	74ALS138	Decoder/demultiplexer
U27	27128A-2	EPROM (81-691E)
U47	27128A-2	EPROM (81-692E)
U86,9Ø,1Ø2,1Ø9,11Ø,112,115	74ALS74	Dual "D" flip-flop
U58	74ALS32	Quad OR gate

Mainboard, 81-Ø35 & 81-Ø36 KAYPRO 286i models A and B cont'd.

U85	74ALS27	Triple NOR gate
U54	74ALS1Ø	Triple NAND gate
U89	74ALSØ8	Quad NAND gate
U79,123,131	74ALSØ4	Hex inverter
U1ØØ,1Ø8	74ALSØ2	Quad NOR gate
U99,128	74ALSØØ	Quad NAND gate

Mainboard, 81-Ø37 KAYPRO 286i model C

The KAYPRO 286i model C mainboard is the same as the KAYPRO 286i models A and B with the following addition:

U3,4,9,1Ø,15,16,21,22,25, 26,3Ø,31,35,36,41, 42,45,46	6665-AP15	64K x 1, 15Øns, dynamic RAM

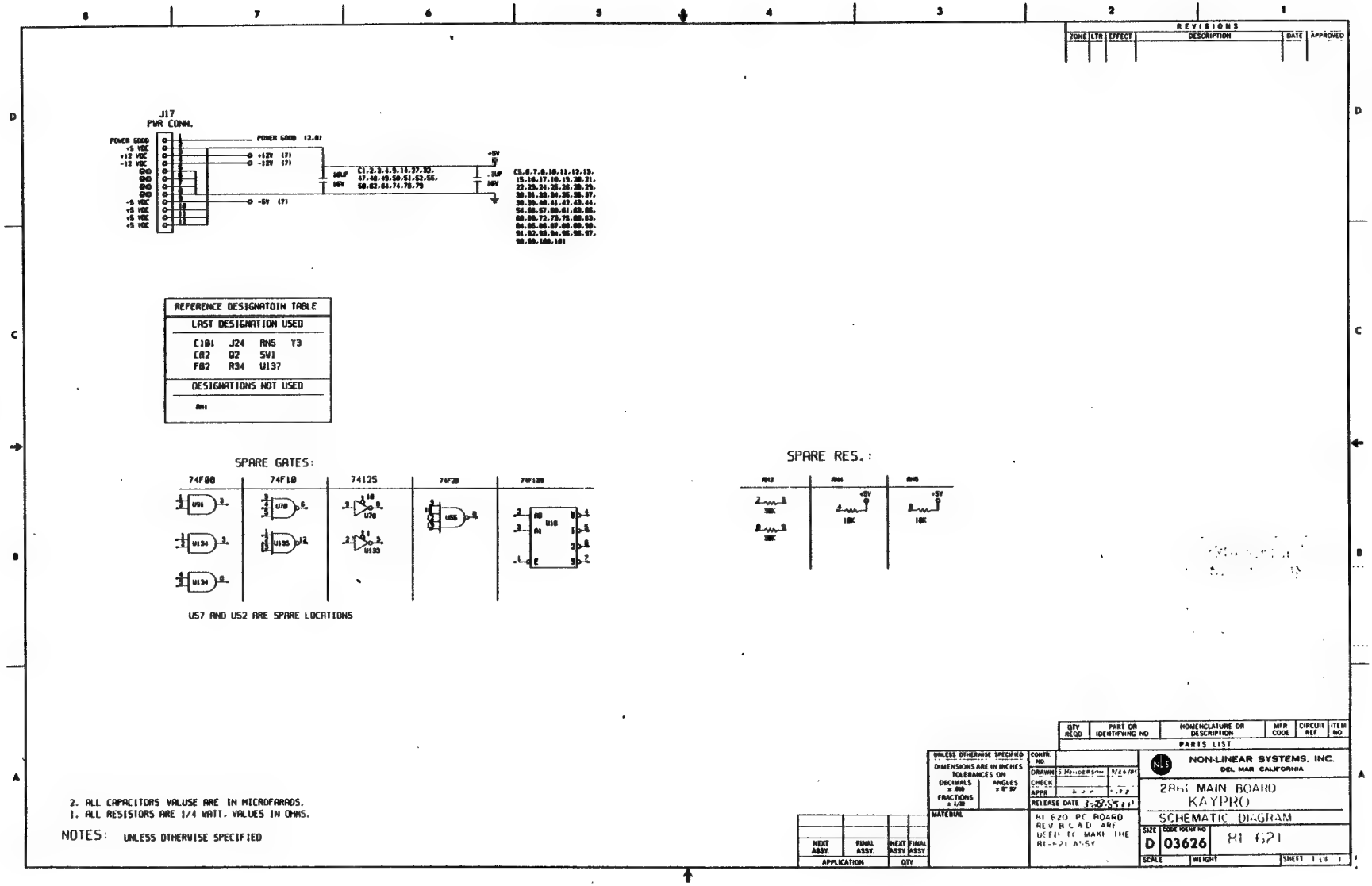
REVISIONS
ZONE LTR EFFECT DESCRIPTION DATE APPROVED
J17
PWR CONN.
POWER GOOD
+5 VDC
+12 VDC
-12 VDC
-5 VDC
+5 VDC
+5 VDC
+5 VDC
POWER GOOD (2,8)
+12V (7)
-12V (7)
-5V (7)
10UF 16V
.1UF 16V
+5V (8)
C1,2,3,4,5,14,27,52,
47,48,49,50,51,53,56,
58,62,64,74,75,79
C6,8,7,8,10,11,12,13,
15,16,17,18,19,20,21,
22,23,24,25,26,28,29,
30,31,32,34,35,36,37,
38,39,40,41,42,43,44,
54,66,67,68,61,63,65,
69,70,72,73,76,80,83,
84,85,86,87,88,89,90,
91,92,93,94,95,96,97,
98,99,100,101
REFERENCE DESIGNATOIN TABLE
LAST DESIGNATION USED
C101 J24 RN5 Y3
CR2 Q2 SW1
FB2 R34 U137
DESIGNATIONS NOT USED
RN1
SPARE GATES:
74F00
74F10
74125
74F20
74F138
U66
U70
U134
U135
U134
U70
U133
U65
U16
A0
A1
E
SPARE RES.:
RN3
RN4
RN5
+5V
10K
10K
10K
US7 AND US2 ARE SPARE LOCATIONS
2. ALL CAPACITORS VALUSE ARE IN MICROFARADS.
1. ALL RESISTORS ARE 1/4 WATT. VALUES IN OHMS.
NOTES: UNLESS OTHERWISE SPECIFIED
QTY REQD
PART OR IDENTIFYING NO
NOMENCLATURE OR DESCRIPTION
MFR CODE
CIRCUIT REF
ITEM NO
PARTS LIST
UNLESS OTHERWISE SPECIFIED
DIMENSIONS ARE IN INCHES
TOLERANCES ON
DECIMALS
FRACTIONS
ANGLES
CONTR NO
DRAWN
CHECK
APPR
RELEASE DATE
MATERIAL
RI 620 PC BOARD
REV B LAD ARE
USED TO MAKE THE
RI-621 ASSY
NEXT ASSY.
FINAL ASSY.
NEXT ASSY
FINAL ASSY
APPLICATION
QTY
NON-LINEAR SYSTEMS, INC.
DEL MAR CALIFORNIA
2861 MAIN BOARD
KAYPRO
SCHEMATIC DIAGRAM
SIZE
CODE IDENT NO
D
03626
RI 621
SCALE
WEIGHT
SHEET 1 OF 1

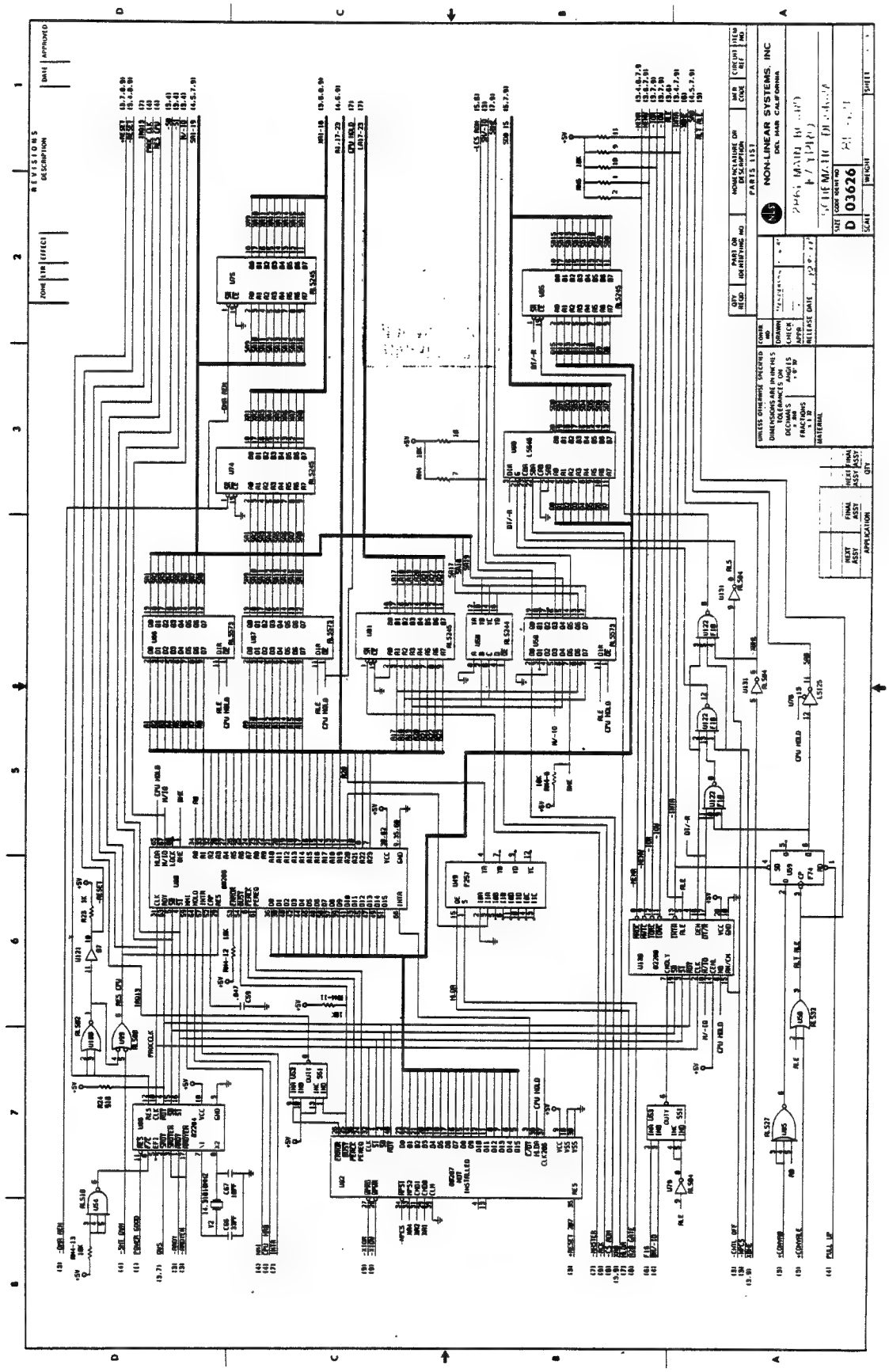

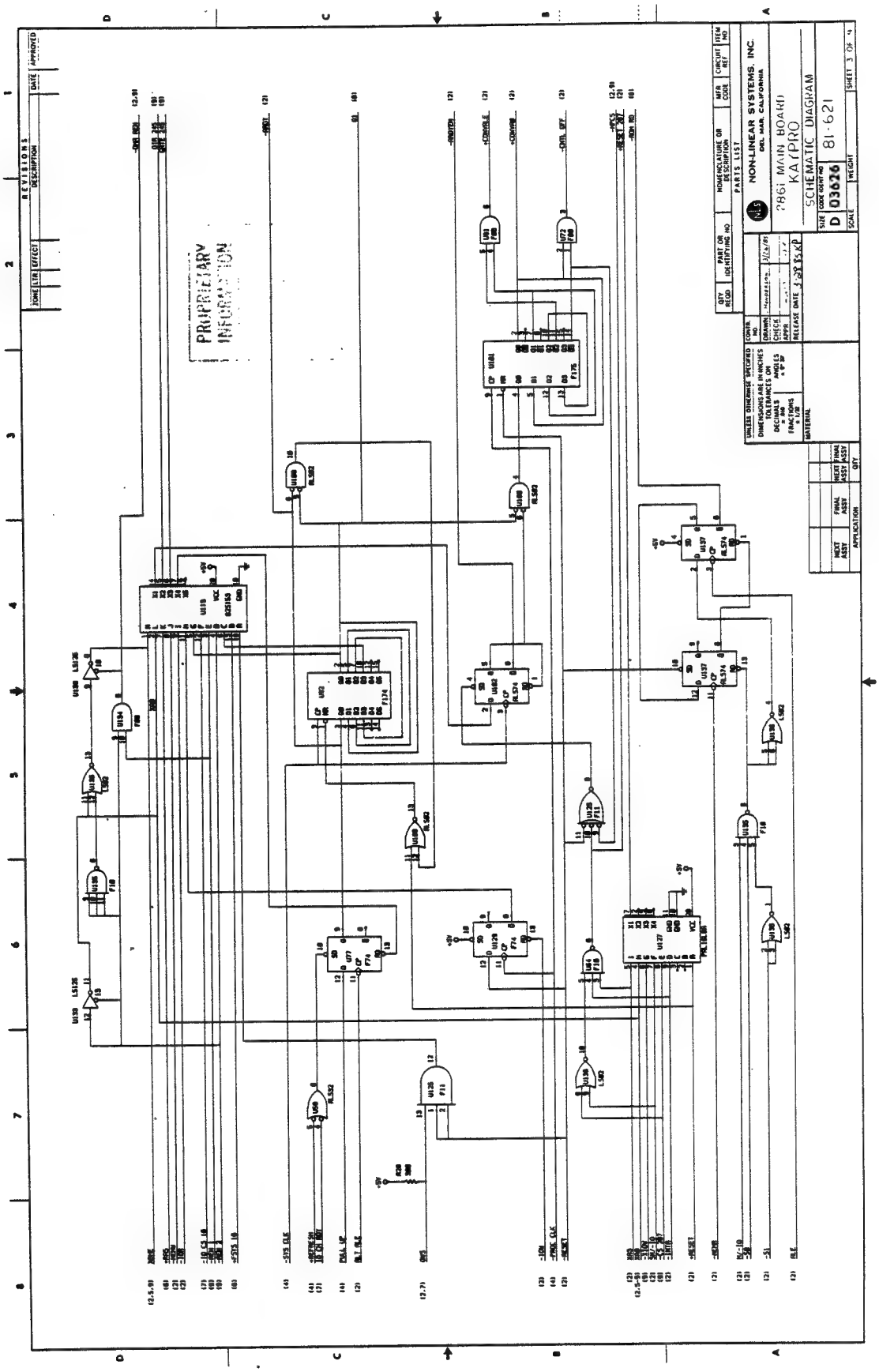
PROPRIETARY
INFORMATION
NON-LINEAR SYSTEMS, INC.
KAYPRO
SCHEMATIC DIAGRAM
81-621

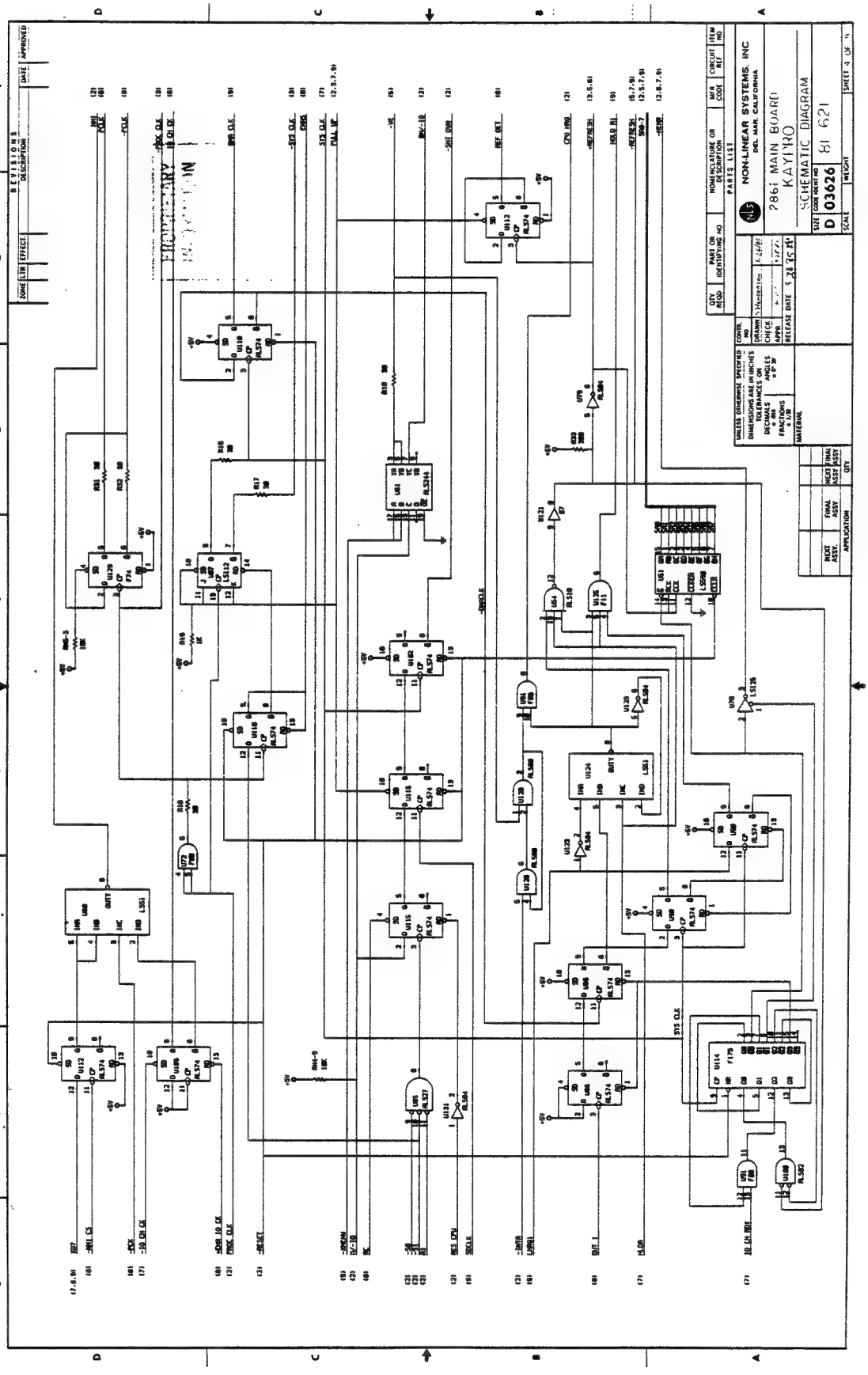
NON-LINEAR SYSTEMS, INC
DEL MAR, CALIFORNIA
2861 MAIN BOARD
KAYPRO
SCHEMATIC DIAGRAM
D 03626
81 621

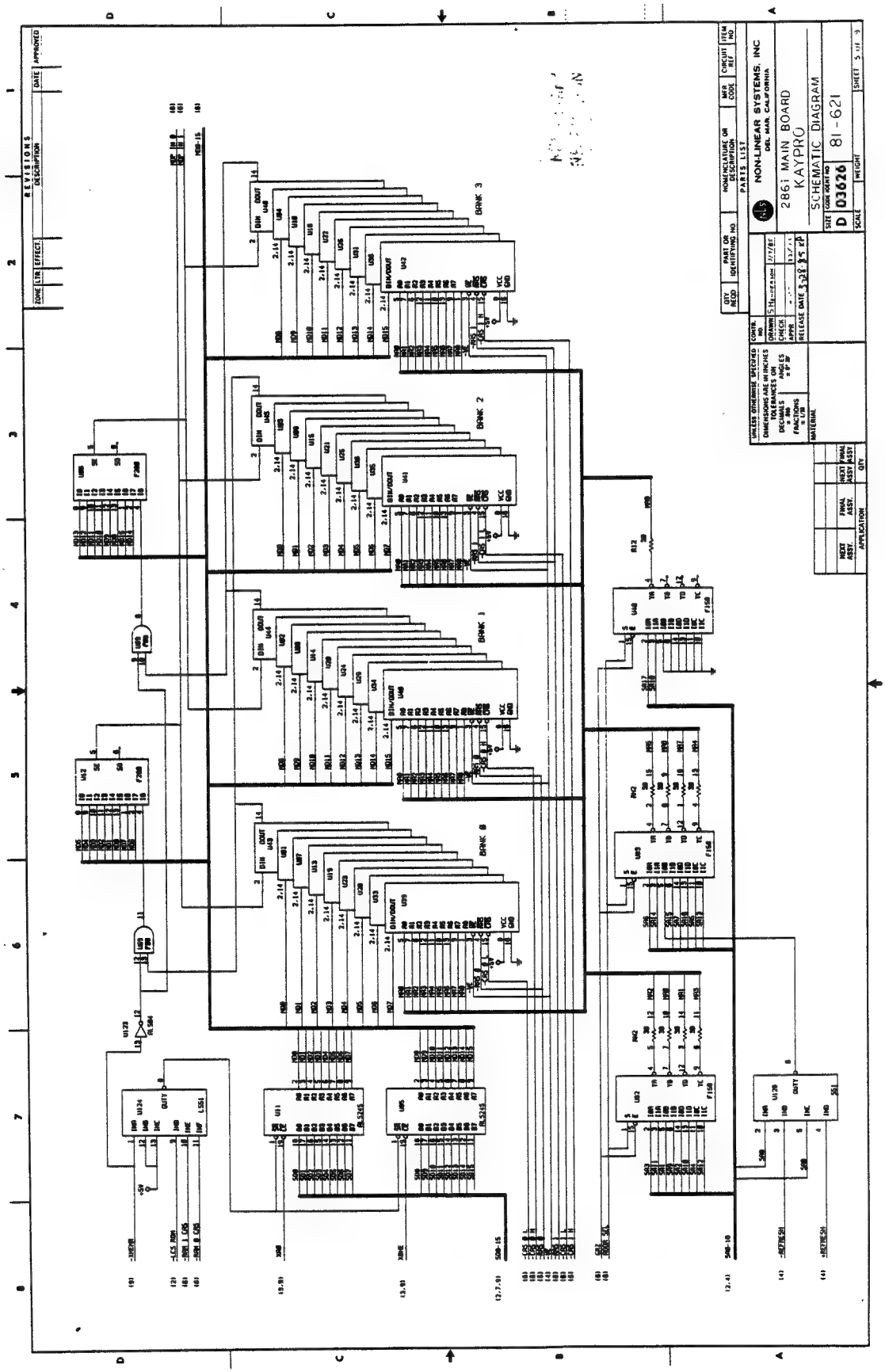
NON-LINEAR SYSTEMS, INC
DEL MAR, CALIFORNIA
2861 MAIN BOARD
KAYPRO
SCHEMATIC DIAGRAM
D 03626 81-621
BANK 3
BANK 2
BANK 1
BANK 0

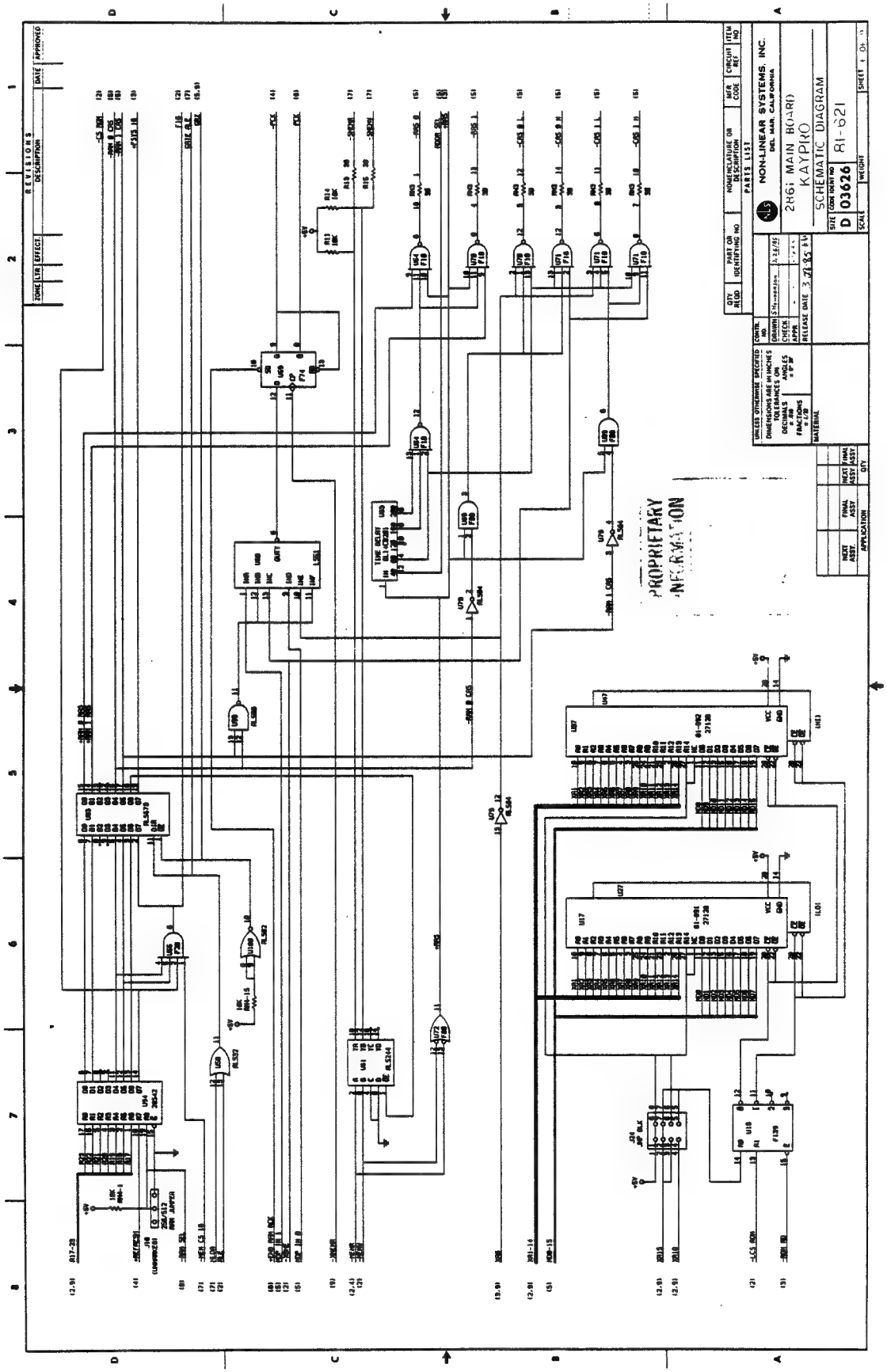
NON-LINEAR SYSTEMS, INC.
DEL MAR, CALIFORNIA
2861 MAIN BOARD
KAYPRO
SCHEMATIC DIAGRAM
D 03626
81-621
PROPRIETARY INFORMATION

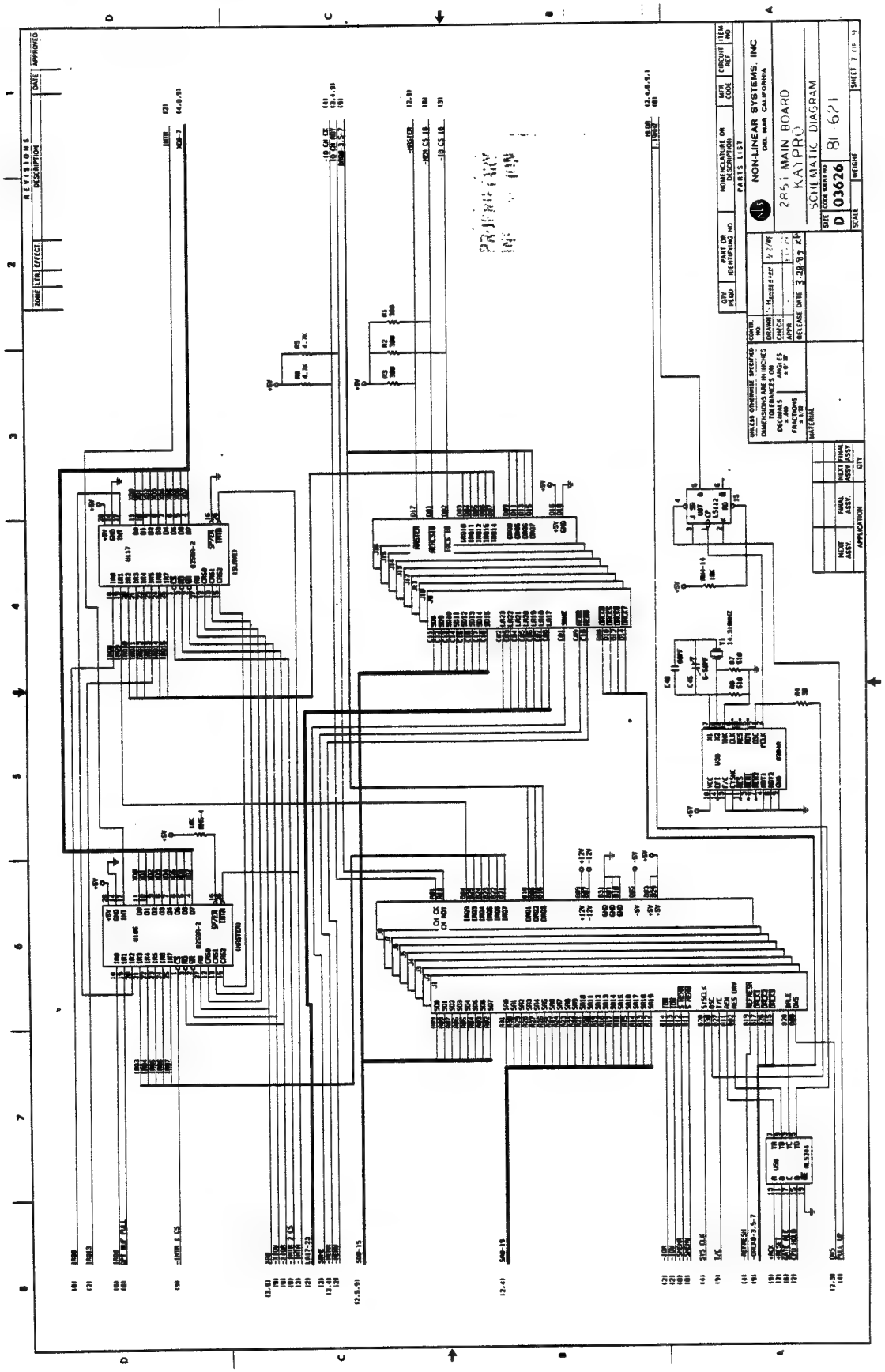
NON-LINEAR SYSTEMS, INC
DEL MAR CALIFORNIA
2851 MAIN BOARD
KAYPRO
SCHEMATIC DIAGRAM
D 03626
81-671

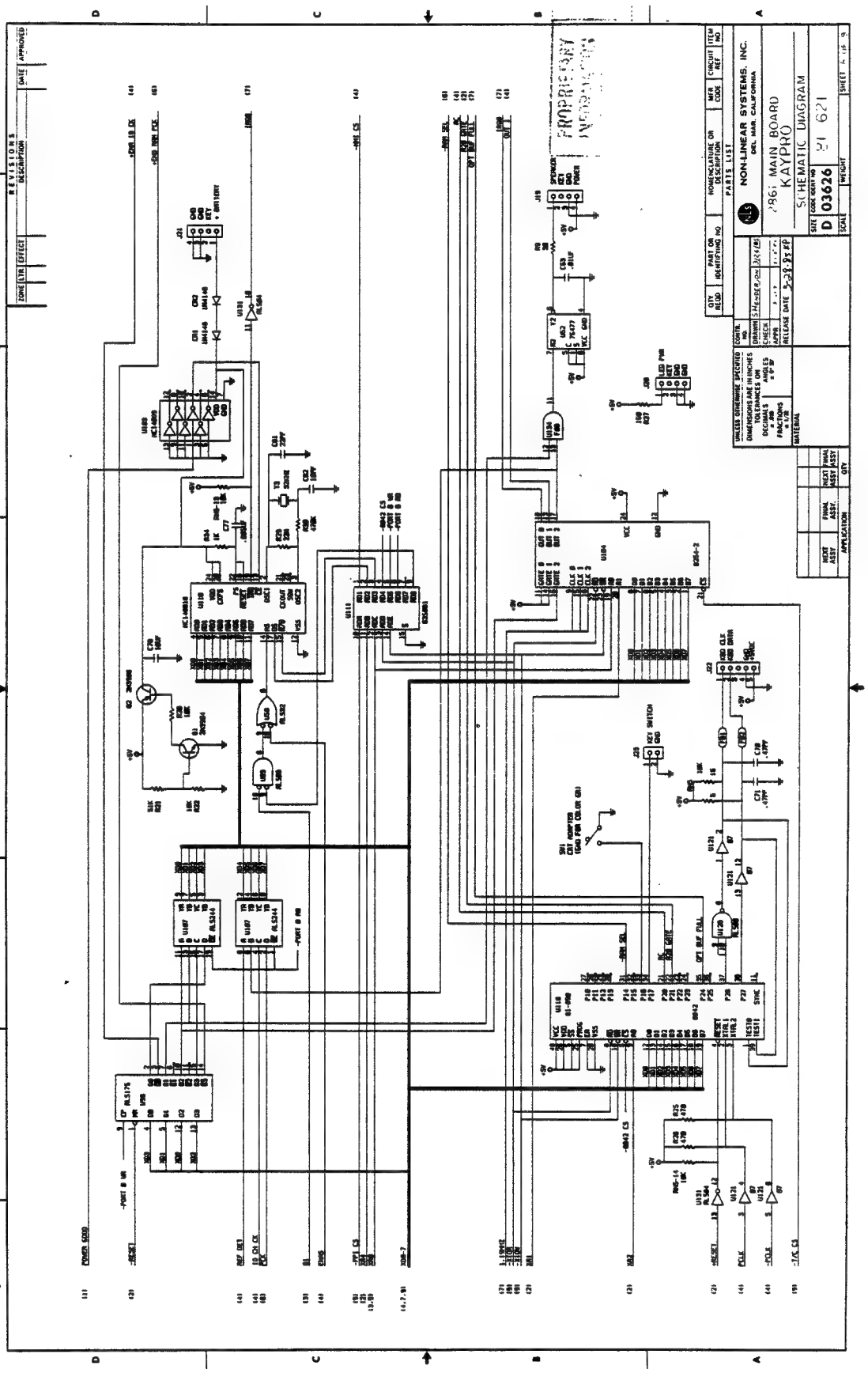
NON-LINEAR SYSTEMS, INC.
1986 MAIN BOARD
KAYPRO
SCHEMATIC DIAGRAM
D 03626
PRELIMINARY

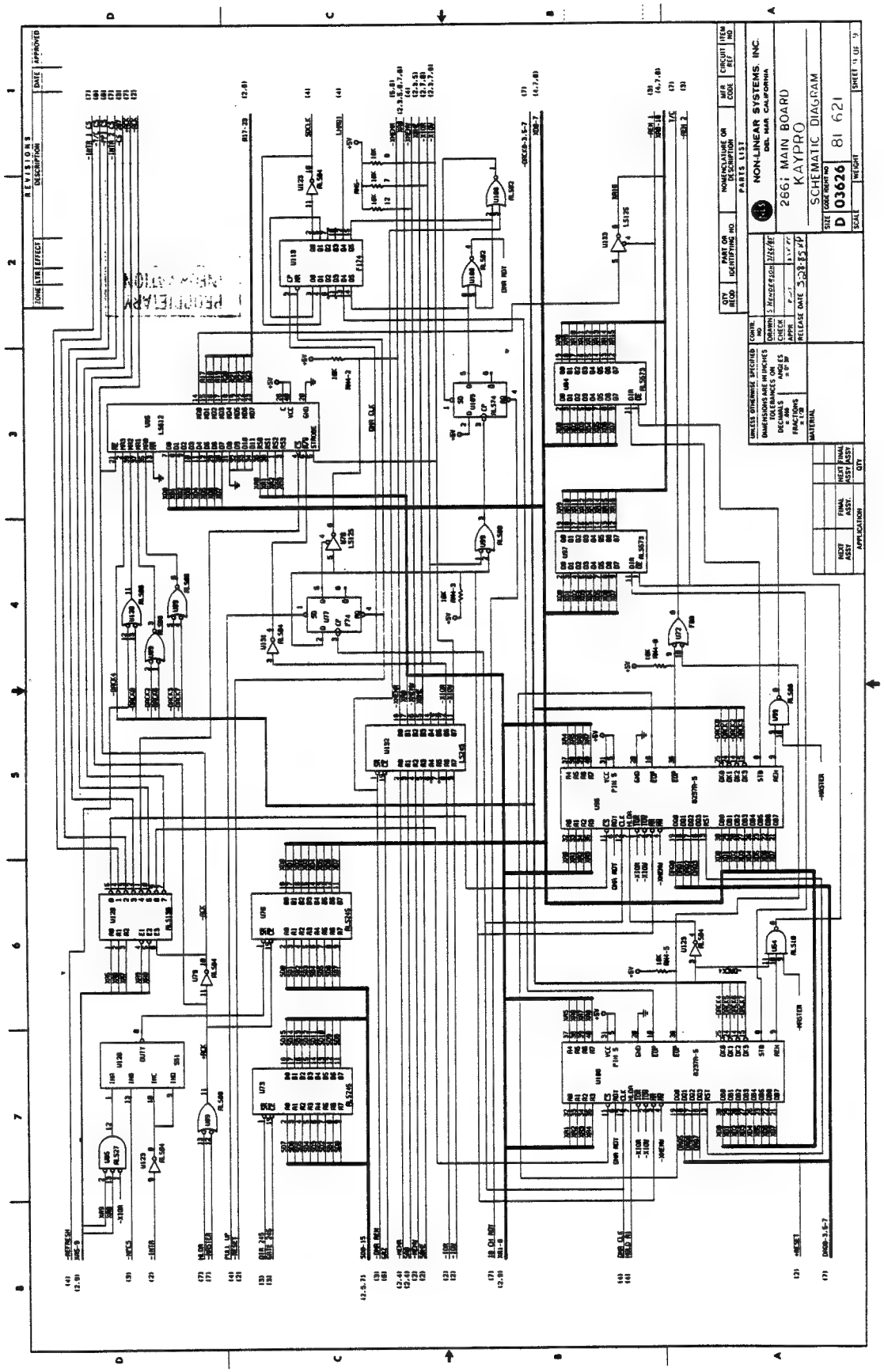
NON-LINEAR SYSTEMS, INC.
DEL MAR, CALIFORNIA
2861 MAIN BOARD
KAYPRO
SCHEMATIC DIAGRAM
D 03626
81 621

23.34 MAINBOARD CONNECTOR PIN ASSIGNMENTS

SPEAKER CONNECTOR (J19)

Pin	Assignment
1	Data Out
2	Key (N/C)
3	Ground
4	+5VDC

KEYBOARD CONNECTOR (J22)

Pin	Assignment
1	Keyboard Clock
2	Keyboard Data

power up.

RAM: 640 KB standard; expandable to 15 MB with

5 +5VDC

KEYLOCK CONNECTOR (J23)

Pin	Assignment
1	Key Switch
2	Ground

POWER CONNECTOR (J17)

Pin	Assignment
1	Power Good
2	+5VDC
3	+12VDC
4	-12VDC
5	Ground
6	Ground
7	Ground
8	Ground
9	-5VDC
1Ø n	

BATTERY CONNECTOR (J21)

Pin	Assignment
1	+ Battery
2	Key
3	Ground
4	Ground

RAM ENABLE/DISABLE SWITCH (J18)

Jumper Positions	Function
1 and 2 (towards the front of the computer)	Disable last 128K of RAM on the mainboard
2 and 3 (towards the back of the computer)	Enable last 128K of RAM on the mainboard
Not Jumpered	Enable last 128K of RAM on the mainboard

Note: Before the system RAM may be increased by installing additional memory expansion cards, either memory banks 2 and 3 on the mainboard must be filled, or this switch must be set to disable those banks. The default setting is "Not Jumpered". Please see section 23.3 Memory Expansion.

TYPE OF DISPLAY CARD JUMPER (SW1)

The purpose of this jumper is to tell the KAYPRO 286i into which display card the primary display is attached. The primary display is activated when the system is turned on.

Jumper Positions	Function
Pins 1 and 2 (the pins closest to the power supply)	The primary display is attached to the color/graphics monitor card.
Pins 2 and 3 (the pins closest to the expansion slots)	The primary display is attached to the monochrome display card.

Figure 23-3 KAYPRO 286i Mainboard Layout

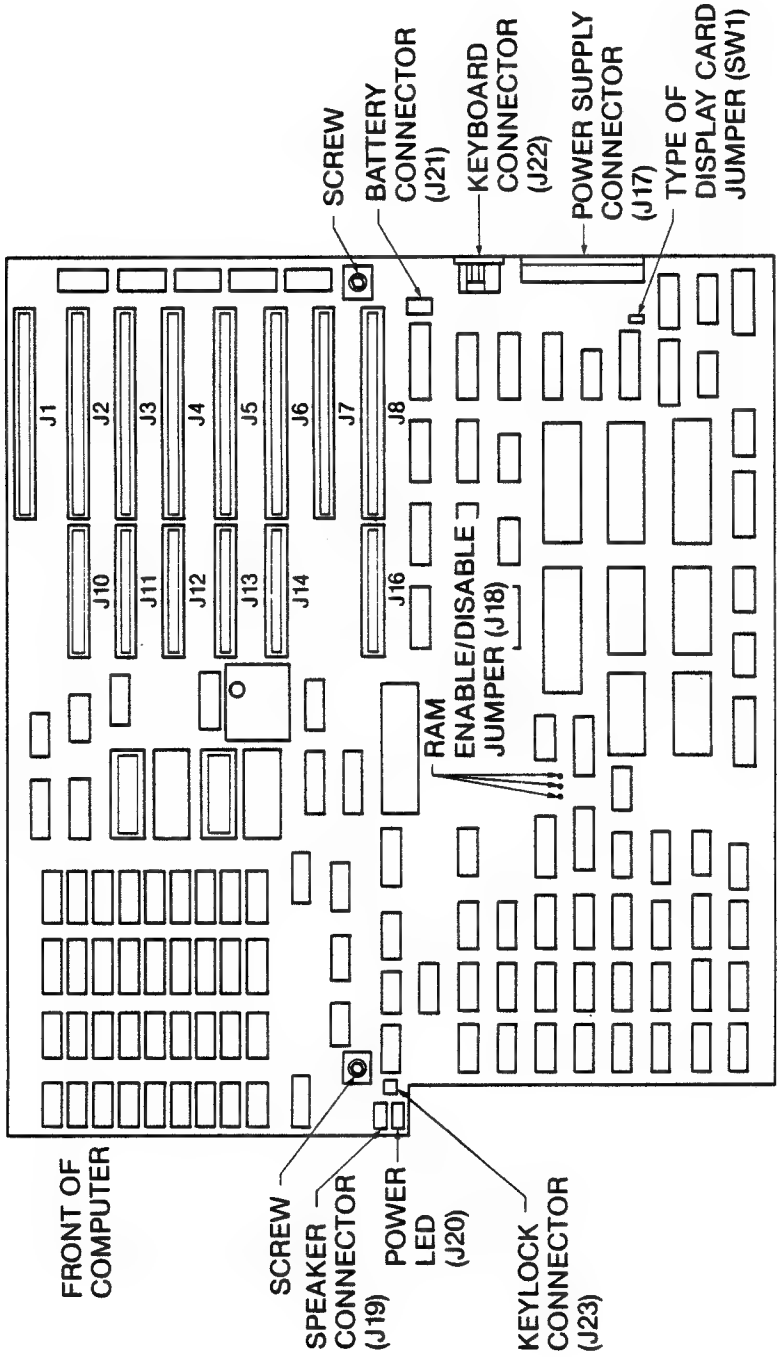

23.35 MAINBOARD REMOVAL

WARNING! The KAYPRO 286i contains static sensitive devices. Make sure that you are grounded before you remove the cover. The preferred method is to have a grounding strap attached to the wrist with the drain lead connected to a common earth ground and to have the computer positioned on a conductive grounded mat. With the above precautions observed, and the power disconnected, one may remove and install components or adapters.

1. Turn off the computer and disconnect the AC power.

2. Remove chassis cover (22.1).

3. Remove all cards from expansion slots (23.24).

4. Refer to Figure 23-3 for mainboard layout.

5. Remove the 2 hex screws on the mainboard. One is located between J7 and J8 near the back of the computer, the other is directly opposite it near the front of the computer.

6. Remove the battery wires from J21 (the battery is the black box attached to the chassis by Velcro).

7. Remove the three sets of wires from J23 (keylock), J19 (the speaker), and J20 (the power LED). Note positions of all wires.

8. Remove the power supply cable from J17.

9. Slide board toward the left side of the computer and lift the mainboard out.

23.36 MAINBOARD INSTALLATION

1. Set the mainboard in the bottom of the computer with the expansion slots toward the left rear corner of the computer.

2. Slide the mainboard toward the right of the computer until you feel it catch the slots on the bottom of the computer and the screw holes on the mainboard are aligned with the screw holes on the bottom of the computer.

3. Replace the two screws on the mainboard.

4. Replace the power supply cable to J17. Note that the three red wires (+5V) go closest to the power supply.

5. Replace the battery wires to J21, the keylock wires to J23, the speaker wires to J19, and the power LED wires to J20.

6. Replace chassis cover.

24.Ø DISK DRIVES

24.1 HIGH-DENSITY FLOPPY DISKETTE DRIVES

24.11 Description

The KAYPRO 286i's are equipped with high-capacity diskette drives. These drives use double-sided, 5 1/4 inch, 6ØØ Oersteds, 96 TPI diskettes. These diskettes are formatted 8Ø tracks per side, 15 sectors per track and have a storage capacity of 1.2 MB per diskette.

As an option, there are regular density diskette drives available from Kaypro. These drives are the same drives used in the 8-bit computers and in the KAYPRO 16 and 16/2. Refer to chapters 9.Ø and 19.5 of this manual for identification of the different drives and their configuration. All of the diskette drives used in the KAYPRO 286i are jumpered the same as the drives used for the B drive in the 8-bit models of Kaypro computers.

24.12 FLOPPY DISKETTE DRIVE CONFIGURATIONS

Toshiba and Mitsubishi are two manufacturers of floppy diskette drives currently being used in the KAYPRO 286i computers. The jumpering instructions for each are as follows:

Toshiba Configuration

1. Locate the plug marked RJ13. The pin marked DE should be jumpered to the middle pin.

2. Locate the plug marked RJ4. On single diskette drive computers or the A drive of dual diskette drive computers, the jumpers should be in place at positions TM, LD, HM, and D2. On the B drive of a dual diskette drive computer, the jumpers should be at positions LD, HM, and D2.

Mitsubishi Configuration

1. Refer to drawing of Mitsubishi floppy diskette drive for plug positions.

2. Locate the plug closest to the capital letter A on the right side of the circuit board of the drive. The jumper should be at position 1.

3. The terminating resistor pack should be in place nearest the letter B on the right side if the diskette drive is at the end of the data cable.

4. The plug marked SS near the letter D on the left side should have its jumper removed.

5. The plug nearest the letter D on the left side should have all jumpers removed except the ones at positions IR and RR.

6. The plug nearest the letter E on the left side should have position 2 jumpered to the middle post.

7. The plug nearest the letter G on the left side is jumpered.

8. The plug nearest the letter H on the left side has positions MM and DC jumpered.

9. The plug nearest the letter J on the left side has position HM jumpered.

Figure 24-1 Mitsubishi Floppy Diskette Drive

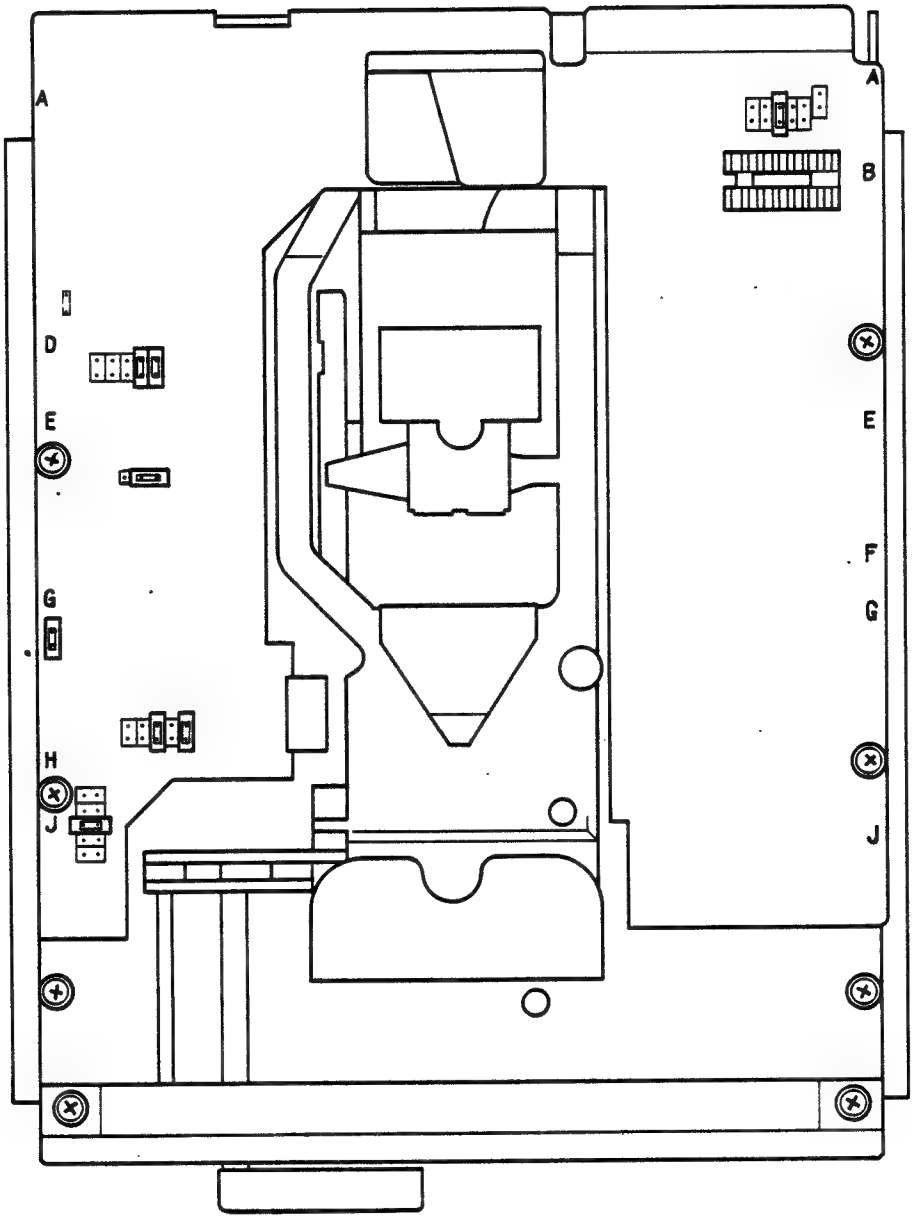

Figure 24–2
Power Connector

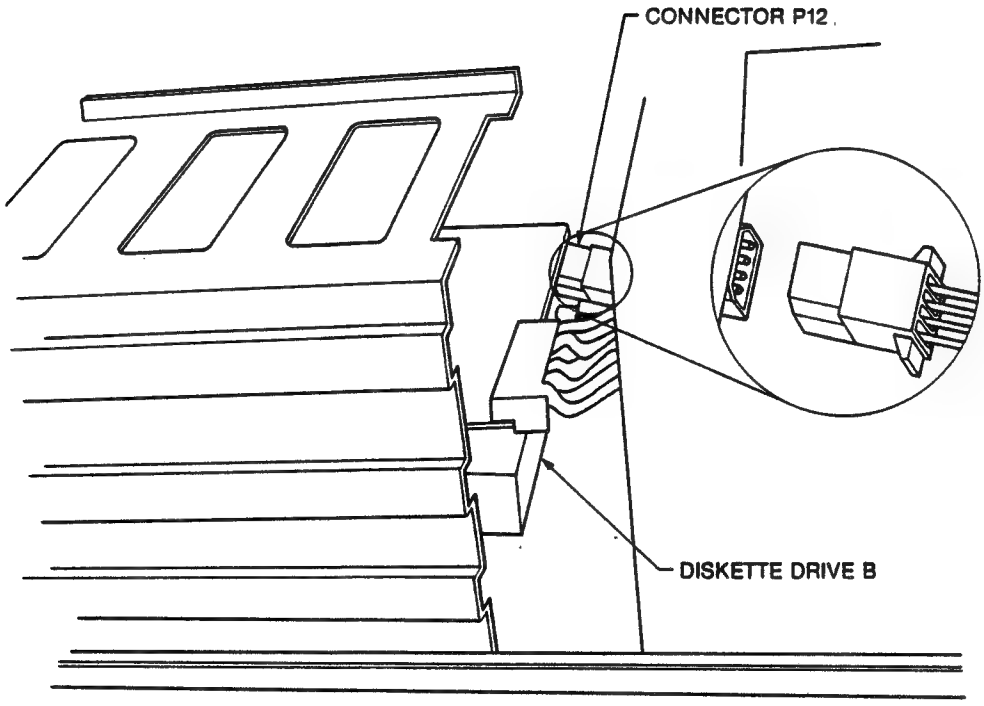

Figure 24–3
Grounding Connector

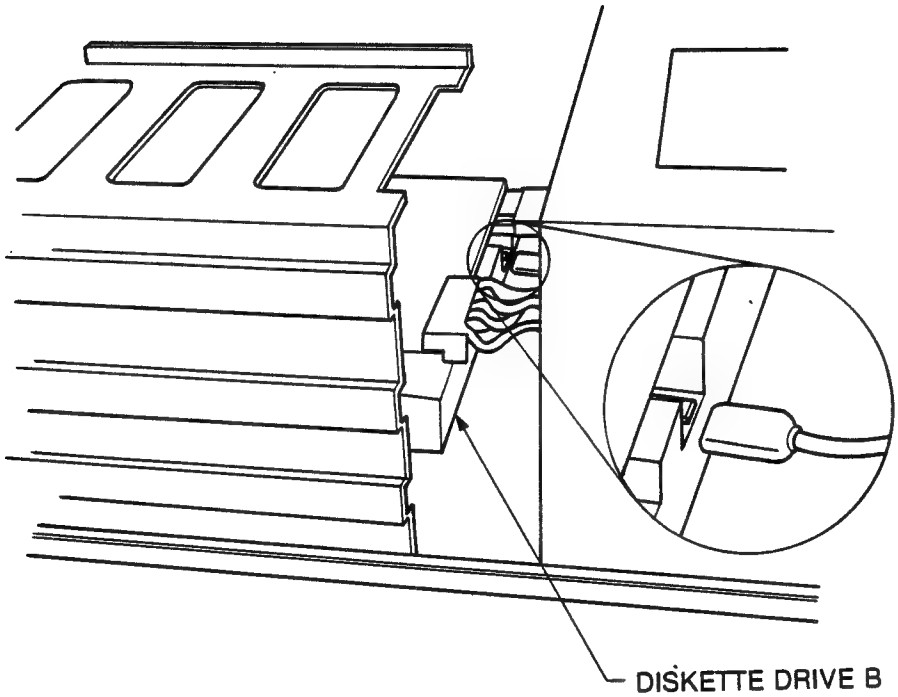

24.13 FLOPPY DISKETTE DRIVE REMOVAL

WARNING! The KAYPRO 286i contains static sensitive devices. Make sure that you are grounded before you remove the cover. The preferred method is to have a grounding strap attached to the wrist with the drain lead connected to a common earth ground and to have the computer positioned on a conductive grounded mat. With the above precautions observed, and the power disconnected, one may remove and install components or adapters.

1. Turn off the computer and disconnect the AC power.

2. Remove chassis cover (22.1).

3. Remove data cables (see Figure 4-7), power connectors (see Figure 24-2), and grounding connectors (see Figure 24-3) from the back of the diskette drives.

4. Remove the mounting screws and clips (see Figure 24-4) from both sides of each drive.

5. Slide drive forward out of computer.

6. Remove black plastic slide rails on the sides of each drive. Note the position of each rail--left and right are different.

Figure 24-4 Mounting Screws and Clips

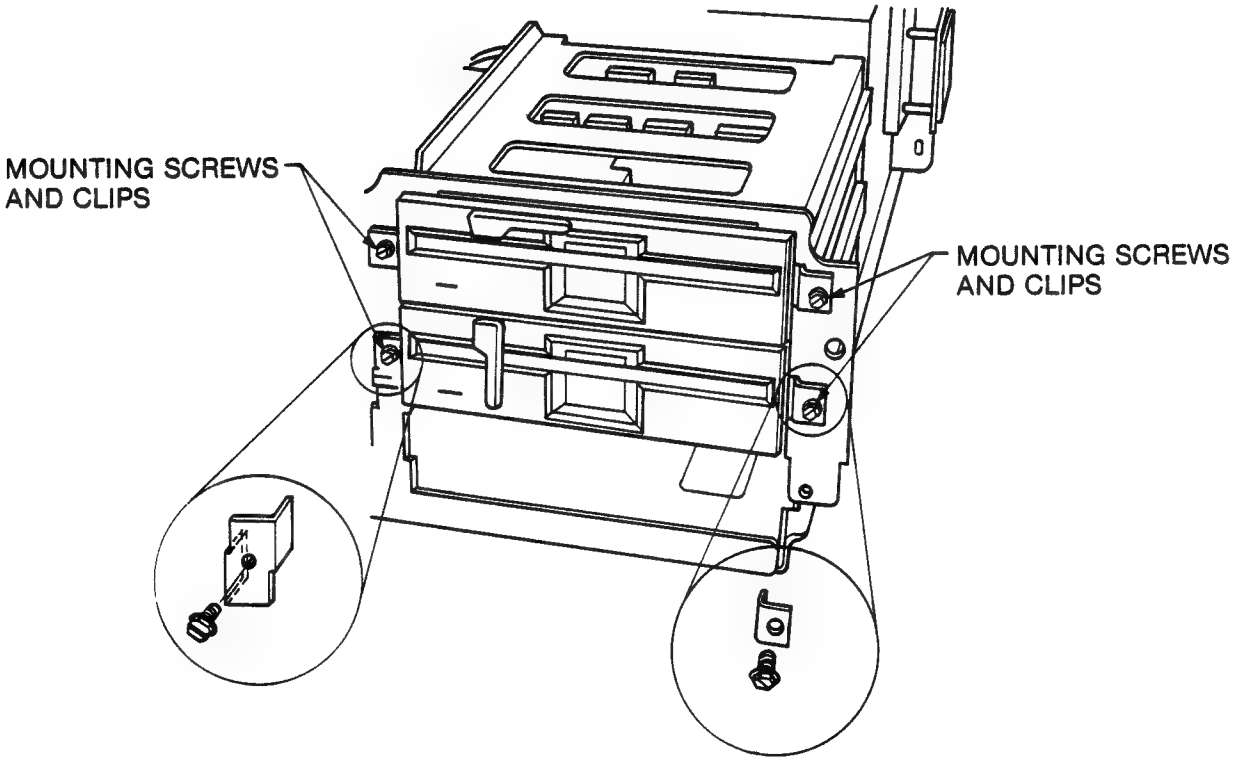

FRONT VIEW

24.14 FLOPPY DISKETTE DRIVE INSTALLATION

1. Install black plastic rails on the new drive(s). Remember that the left and right rails are different.

2. If you are installing a new diskette drive rather than replacing an old one, you must first remove the cover plate (see Figure 24-5).

3. Slide the drive forward into the computer.

4. Replace the mounting screws and clips (refer to Figure 24-4) to both sides of each drive.

5. Replace the data cables on the drives (refer to Figures 24-6 and 24-7). If there are two drives, the top one should be at the end of the data cable. If there is only one drive, it should be at the end of the data cable.

6. Replace the power connectors and the grounding connectors (refer to Figures 24-2 and 24-3).

7. Replace the chassis cover.

8. Any time you are installing a diskette drive, (a brand new drive, or a different type of drive), you should run the "Setup" program.

Figure 24-5 Cover Plate

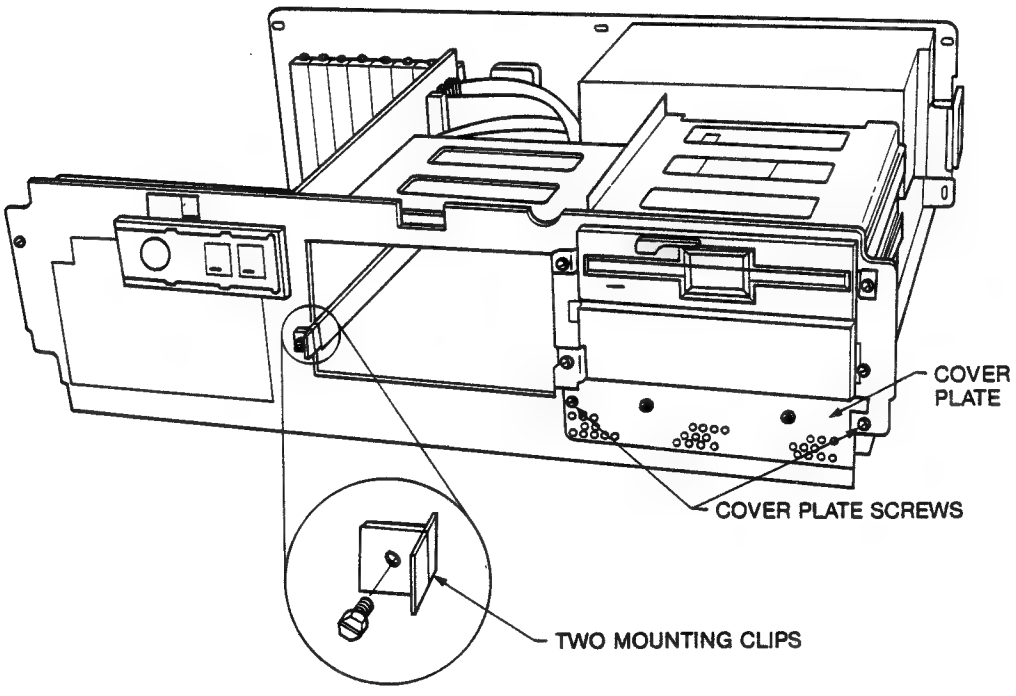

Figure 24-6 Drive Cable

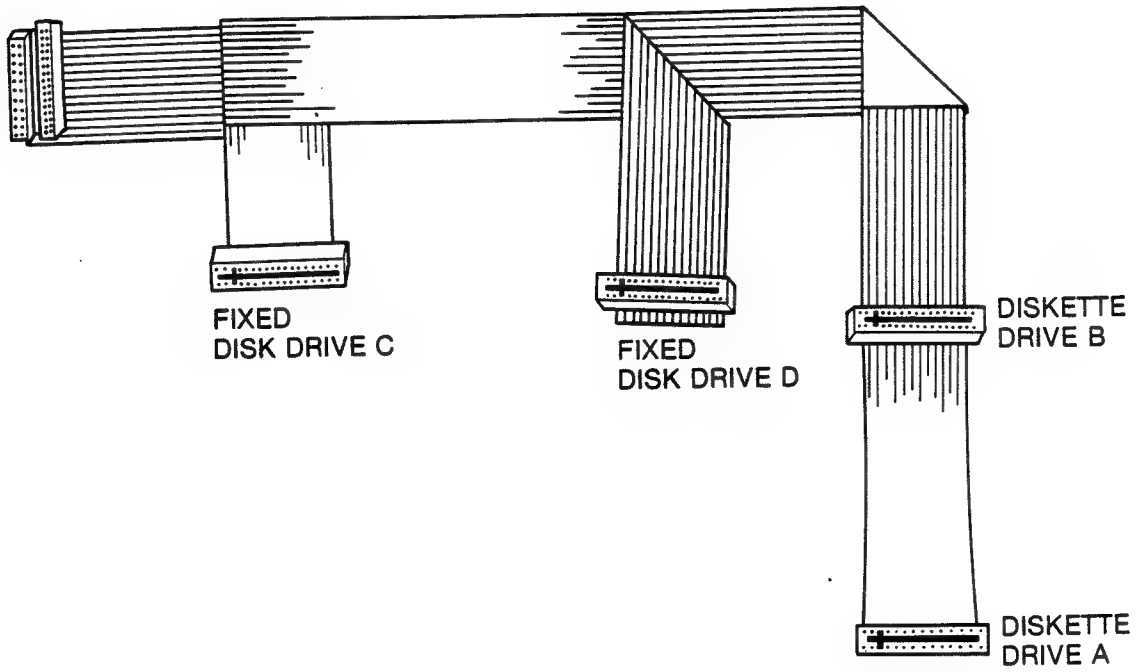

Figure 24-7 Drive Cables in the KAYPRO 286i

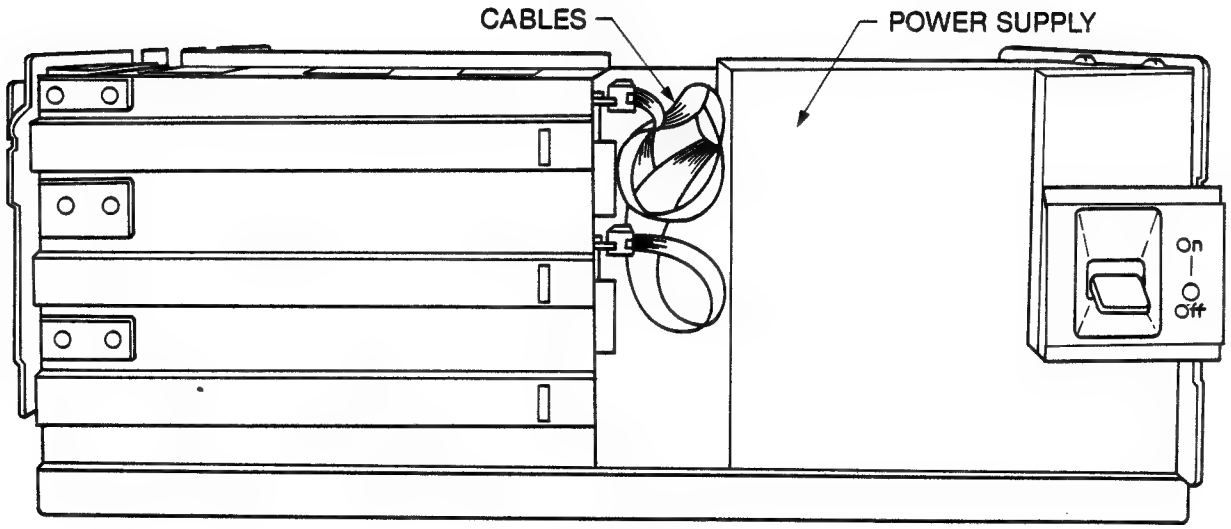

24.2 HARD DISK DRIVE

24.21 Description

The KAYPRO 286i models C and D are equipped with a 20M byte hard disk drive manufactured by Seagate.

24.22 HARD DISK DRIVE CONFIGURATION

Hold the hard disk drive with the face plate of the drive facing you, and the circuit board face up. Between the two edge connectors is a plug with four pins. All jumpers should be removed except for the left middle pin.

24.23 HARD DISK DRIVE REMOVAL

1. Turn off the computer and disconnect the AC power.
2. Remove the chassis cover (22.1).
3. Remove the data cables, power connector, and grounding connector from the hard disk drive.
4. Remove the mounting screws and clips from both sides of the hard disk drive (refer to Figure 24-5).
5. Slide hard disk drive forward out of the computer.
6. Remove the black plastic slide rails that are on the sides of the hard disk drive. Note the position of each rail—left and right sides are different.

24.24 HARD DISK DRIVE INSTALLATION

1. Install black plastic rails on the new hard disk drive. Remember that the left and right rails are different.

2. Slide the hard disk drive forward into the computer.

3. Replace the mounting screws and clips (refer to Figure 24-5) on both sides of the hard disk drive.

4. Replace the data cables (refer to Figures 24-6 and 24-7), power connector, and grounding connector on the hard disk drive.

5. Replace the chassis cover.

6. Any time you are installing a hard disk drive, (a brand new drive, or a different type of drive), you must format the disk using the "Format" program included with the KAYPRO 286i Service Test Utilities Diskette which will be available from Kaypro. After the disk is formatted, you should run the "Fdisk", "Format", and "Setup" programs from an MS-DOS diskette.

25.Ø STREAMING TAPE DRIVE

25.1 Description

The KAYPRO 286i model D comes equipped with a 1/4-inch streaming tape cartridge drive. This drive uses standard 45Ø-foot-long tape cartridges and can store 2Ø Mbytes or 45 Mbytes of data using the 4-track or 9-track format, respectively. The use of 6ØØ-foot-long tape cartridges allows a storage capacity of 26.7 Mbytes or 6Ø Mbytes using the 4-track or 9-track format, respectively.

25.2 STREAMING TAPE DRIVE REMOVAL

1. Turn off the computer and disconnect the AC power.
2. Remove the chassis cover (22.1).
3. Remove the data cables, power connector, and grounding connector from the streaming tape drive.
4. Remove the mounting screws and clips from both sides of the streaming tape drive (see Figure 24-4).
5. Slide streaming tape drive forward out of the computer.
6. Remove the black plastic slide rails that are on the sides of the streaming tape drive. Note the position of each rail—left and right sides are different.

25.2 STREAMING TAPE DRIVE INSTALLATION

1. Install black plastic rails on the new streaming tape drive. Remember that the left and right rails are different.

2. If you are installing a new tape drive rather than replacing an old one, you must first remove the cover plate (see Figure 24-5).

3. Slide the streaming tape drive forward into the computer.

4. Replace the mounting screws and clips on both sides of the streaming tape drive.

5. Replace the data cables, power connector, and grounding connector on the streaming tape drive.

6. Replace the chassis cover.

26.Ø POWER SUPPLY

26.1 Description

The power supply used in the KAYPRO 286i is a 192 watt switching type manufactured by either California D.C. or Tri Mag. The power supply unit includes the on/off switch, the fan, most of the wiring harness, and the voltage selector switch. If a problem is encountered with any of these items, the entire power supply must be exchanged. Opening the power supply unit will void the warranty.

26.2 23ØV CONFIGURATION

To configure the power supply for 23ØV use, simply locate the voltage selector switch (refer to Figure 26-1) on the back of the computer and select the 23ØV setting.

CAUTION: SETTING THE VOLTAGE SELECTOR SWITCH TO THE WRONG POSITION CAN CAUSE EXTENSIVE DAMAGE TO THE KAYPRO 286i.

Figure 26-1 Power Supply Voltage Selector Switch
Power Supply Mounting Screws

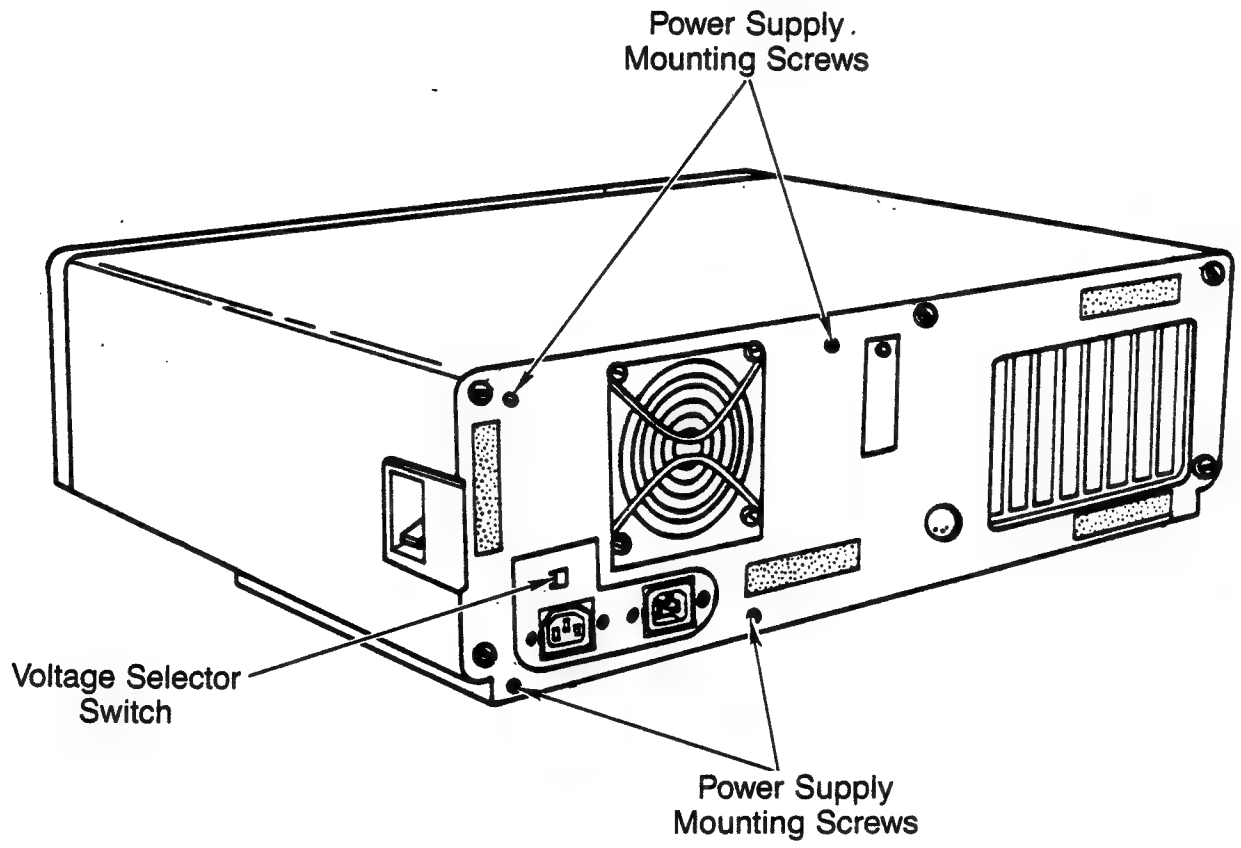

26.3 POWER SUPPLY REMOVAL

WARNING! The KAYPRO 286i contains static sensitive devices. Make sure that you are grounded before you remove the cover. The preferred method is to have a grounding strap attached to the wrist with the drain lead connected to a common earth ground and to have the computer positioned on a conductive grounded mat. With the above precautions observed, and the power disconnected, one may remove and install components or adapters.

1. Turn off the computer and disconnect the AC power.

2. Remove the chassis cover (22.1).

3. Remove the power connectors and grounding connector from the diskette drive(s) and the hard disk drive (refer to Figures 24-2 and 24-3).

4. Remove the 12-pin connector from J17 on the mainboard.

5. Remove the four hex screws from the back of the computer (Refer to Figure 26-1).

6. Push the power supply toward the front of the computer and lift it out.

26.4 POWER SUPPLY INSTALLATION

1. Install the power supply in the computer until the holes in the power supply align with the screw holes in the back of the computer chassis.

2. Replace the four hex screws through the back of the computer chassis, into the power supply, and tighten them (refer to Figure 26-1).

3. Replace the 12-pin connector into J17 on the mainboard. Notice that the three red wires (+5VDC) go closest to the power supply.

4. Replace the power connectors and grounding connectors to the diskette drive and the hard disk drive (refer to Figures 24-2 and 24-3).

5. Replace the chassis cover.

27.Ø KEYBOARD

27.1 Description

The keyboard carries signals between itself and the KAYPRO 286i through the use of a bidirectional serial interface.

The keyboard has a buffer that saves data until the interface is ready to receive it. This buffer stores 16 characters on a first-in-first-out basis.

All keys pressed on the keyboard will be detected, and scan codes sent to the interface in correct sequence, regardless of the number of keys depressed. Any keystrokes entered while the keylock is on will not be detected.

27.2 KEYBOARD CONNECTOR

The keyboard has a five pin DIN connector with the following keyboard interface signals:

DIN	SIGNAL NAME
1	Keyboard Clock
2	Keyboard Serial Data
3	Reset
4	Ground
5	+5VDC

28.Ø BATTERY

28.1 Description

The battery powers the computer's clock and the system configuration memory. The life expectancy of this battery is three to five years. If the system clock starts running noticeably slow, or if the computer displays the message "Invalid configuration information", or "Time-of-day clock stopped", it is probably time to replace the battery. Any time the battery is removed or disconnected from the mainboard, the system configuration information is lost, and the "Setup" program must be run.

28.2 BATTERY REMOVAL

WARNING! The KAYPRO 286i contains static sensitive devices. Make sure that you are grounded before you remove the cover.

1. Turn off the computer and disconnect the AC power.
2. Remove the chassis cover (22.1).
3. Locate the battery to the right of the expansion slots attached to the back of the chassis by a Velcro (tm) strip (refer to Figure 28-1).
4. Remove the battery connector from the mainboard.
5. Gently pull the battery from the chassis.

Figure 28-1 Location of the Battery

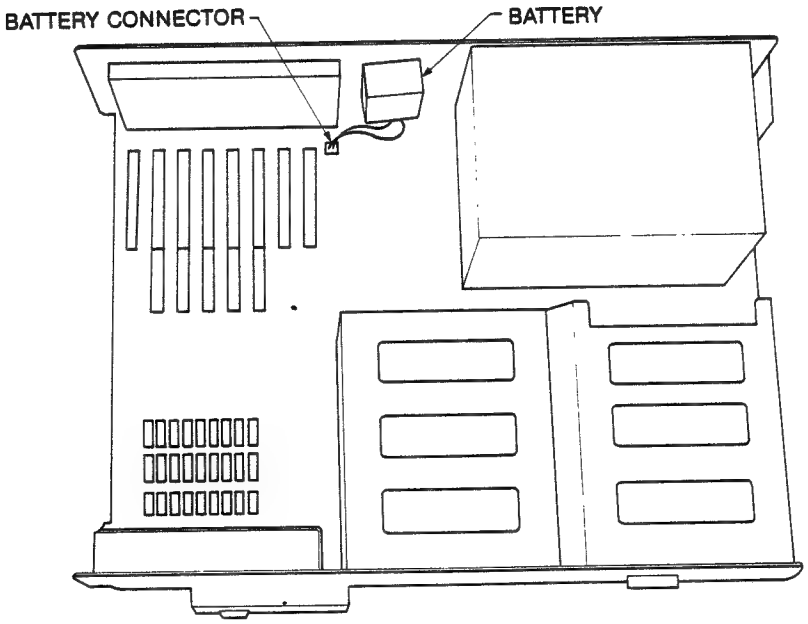

28.3 BATTERY INSTALLATION

1. Press the side of the battery that has the Velcro (tm) strip to the Velcro (tm) strip on the chassis.

2. Attach the battery connector to the mainboard at position J1.

3. Replace the chassis cover.

4. Any time the battery is removed or disconnected from the mainboard, the system configuration information is lost, and the "Setup" program must be run.

29.Ø SYSTEM I/O

29.1 PARALLEL PORT PIN ASSIGNMENTS

The pin assignments for the primary parallel port (LPT 1) on the KAYPRO 286i are as follows:

PARALLEL PORT (PRN 1) PIN	SIGNAL	DIRECTION OF SIGNAL
1	Strobe	——>
2	Data Ø	——>
3	Data 1	——>
4	Data 2	——>
5	Data 3	——>
6	Data 4	——>
7	Data 5	——>
8	Data 6	——>
9	Data 7	——>
1Ø	Acknowledge	<——
11	Busy	<——
12	Paper End	<——
13	Select	<——
14	Auto Feed	——>
15	Fault	<——
16	Initiate	——>
17	Select In	——>
18-25	Ground	——

NOTE: ALL CABLES USED WITH THE KAYPRO 286i MUST BE SHIELDED IN ORDER TO COMPLY WITH FCC REGULATIONS.

29.2 SERIAL PORT PIN ASSIGNMENTS

The pin assignments for the serial port (COM 1) on the KAYPRO 286i are as follows:

SERIAL PORT PIN	SIGNAL	DIRECTION OF SIGNAL
1	Carrier Detect	<——
2	Receive Data	<——
3	Transmit Data	——>
4	Data Terminal Ready	——>
5	Signal Ground	——
6	Data Set Ready	<——
7	Request To Send	——>
8	Clear To Send	<——
9	Ring Indicator	<——

NOTE: ALL CABLES USED WITH THE KAYPRO 286i MUST BE SHIELDED IN ORDER TO COMPLY WITH FCC REGULATIONS.

29.3 RGB MONITOR ADAPTER PIN ASSIGNMENTS

The pin assignments for the RGB monitor adapter are as follows:

PIN	SIGNAL
1	Ground
2	Ground
3	Red input
4	Green input
5	Blue input
6	Intensity
7	No connection
8	Horizontal sync
9	Vertical sync

NOTE: ALL CABLES USED WITH THE KAYPRO 286i MUST BE SHIELDED IN ORDER TO COMPLY WITH FCC REGULATIONS.

29.4 I/O PORT ADDRESSES

PORT (HEX)	DEVICE/FUNCTION
000-01F	DMA chip, 8237A-5
020-03F	Interrupt, 8259A
040-05F	Timer, 8254-2
060-06F	Keyboard, 8042
070-07F	Real-time clock
080-09F	DMA Register, 74LS612
0A0-0BF	Interrupt controller, 8259A
0C0-ODF	DMA controller, 8237A-5
0F0	Math co-processor
0F1	Math co-processor
0F8-0FF	Math co-processor
1F0-1F8	Reserved
200-207	Game I/O
278-27F	Parallel port (secondary)
2F8-2FF	Reserved
300-31F	Reserved
360-36F	Reserved
378-37F	Parallel port (primary)
380-38F	SDLC, bisynchronous (secondary)
3A0-3AF	Bisynchronous (primary)
3B0-3BF	Reserved
3C0-3CF	Reserved
3D0-3DF	Color graphics
3F0-3F7	Diskette controller
3F8-3FF	Serial port

29.5 MEMORY MAP OF THE KAYPRO 286i COMPUTER

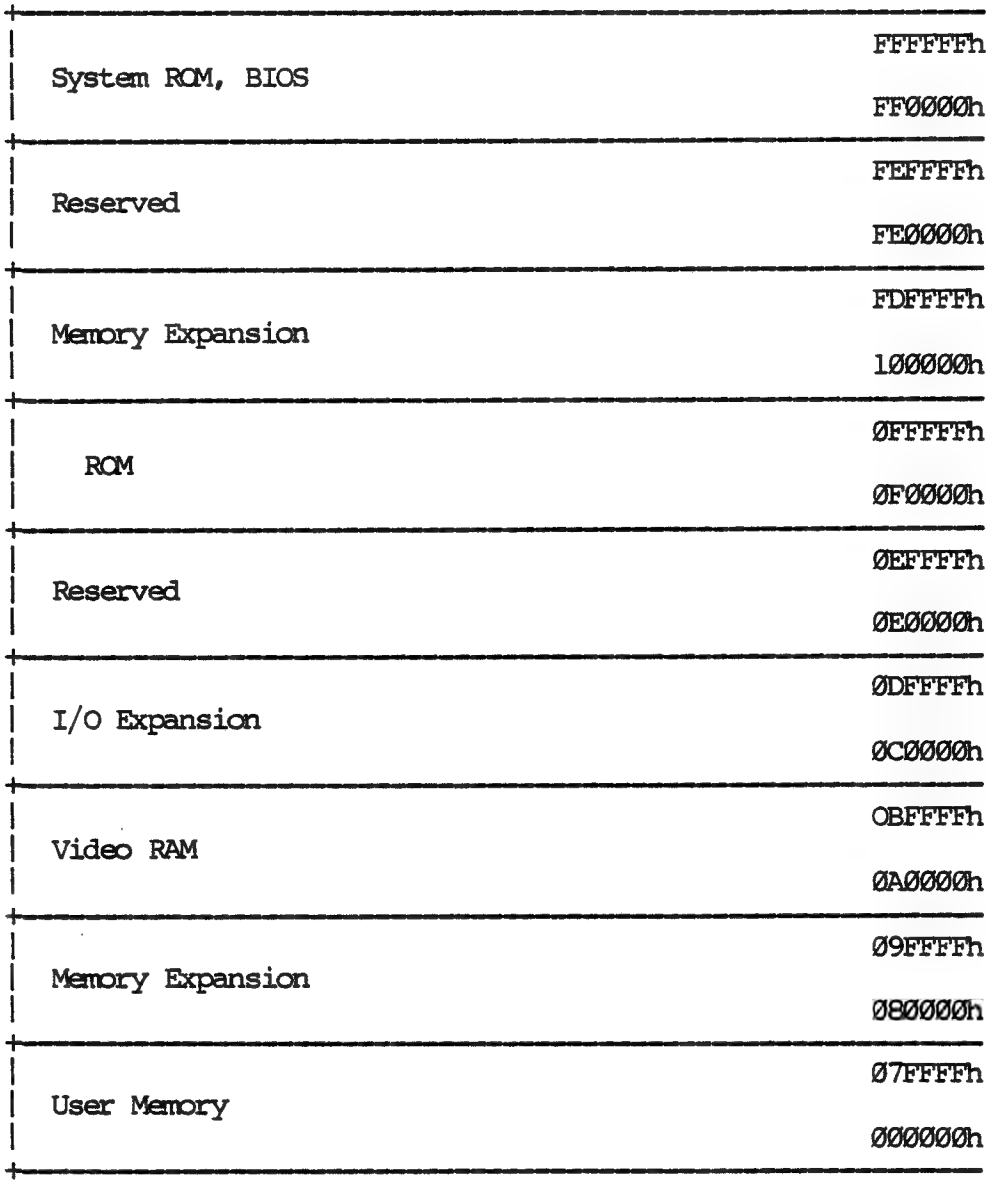

INDEX

220V configuration
   8-bit computers, 8—2
   KAYPRO 16, 19—27
230V configuration, KAYPRO 286i, 26—1
80287 math co-processor, KAYPRO 286i, 23—8
adapter cards, KAYPRO 16
   installation, 19—20
   removal, 19—18
adapter cards, KAYPRO 286i
   color card, 23—1
   controller card, 23—1
   installation, 23—6
   removal, 23—6
   serial/parallel port card, 23—2
   tape drive controller card, 23—1
ASCII chart, 8-bit computers, 17—1
battery, KAYPRO 286i
   connector, 23—16
   description, 28—1
   installation, 28—2
   removal, 28—1
block diagram
   KAYPRO 10, 6—20
   KAYPRO 2 and 4, 6—7
board assembly removal, KAYPRO 16, 19—16
chassis cover, KAYPRO 286i, 22—1
chassis cover, ROBIE, 14—1
chassis hood, 8-bit computers, 5—1
chassis hood, KAYPRO 16, 19—3
chip layout
   KAYPRO 10 (81-180-n), 6—16
   KAYPRO 2 (81-110-n), 6—2
   KAYPRO 2/4 (81-240-n), 6—8
   KAYPRO 2/84 and 2X (81-294-n), 6—26
   KAYPRO 4/84 (81-184-n), 6—34
   KAYPRO ROBIE (81-296-n), 6—42
color card, KAYPRO 286i, 23—1
connectors, 8-bit computers
   keyboard, 16—6, 16—8
   keyboard KAYPRO 10, 16—7
   modem, 16—9
   modem port KAYPRO 10, 16—7
   parallel printer connector KAYPRO 10, 16—7
   parallel printer port, 16—5, 16—9
   serial data channel, 16—8
   serial port, 16—6
   serial printer connector, 16—8
   serial printer connector KAYPRO 10, 16—7.1
connectors, KAYPRO 16, 19—43

connectors, KAYPRO 286i
battery, 23—16
keyboard, 23—16, 27—1
keylock, 23—16
power, 23—16
speaker, 23—16
controller board, 8-bit computers, 11—1
controller board, KAYPRO 16, 19—22
controller card, KAYPRO 286i, 23—1
CRT, 8-bit computers
aligning yoke, 7—2.1
alignment, 7—3
brightness, 7—2
descriptions, 7—1
focus, 7—2
horizontal centering, 7—1
horizontal hold, 7—2
horizontal width, 7—1
installation (except ROBIE), 7—5
removal (except ROBIE), 7—5
vertical size and linearity, 7—1
CRT, KAYPRO 16
adjustments, 19—23
installation, 19—25
removal, 19—24
DE-9P serial port, KAYPRO 16, 19—46
DE-9S connector, KAYPRO 16, 19—44
diskette drives, 8-bit computers
cleaning, 9—1
configuration, 9—5
Drivetec, 9—1, 9—9
identification, 9—2
installation (except ROBIE), 9—10
installation (ROBIE), 14—2
removal (except ROBIE), 9—10
removal (ROBIE), 14—2
diskette drives, KAYPRO 16
description, 19—31
installation, 19—34
removal, 19—32
removal (KAYPRO 16/2), 20—2
diskette drives, KAYPRO 286i
configuration, 24—1
description, 24—1
installation, 24—6
removal, 24—5
FCC information
8-bit computers, 2—1
KAYPRO 286i, 21—2
hard disk drive controller board
8-bit computers, 11—1
KAYPRO 16, 19—22
KAYPRO 286i, 23—1

hard disk drive, 8-bit computers
configuration, 10—3
description, 10—2
installation, 10—5
introduction, 10—1
removal, 10—4
hard disk drive, KAYPRO 16
description, 19—37
installation, 19—40
removal, 19—38
hard disk drive, KAYPRO 286i
configuration, 24—8
description, 24—8
installation, 24—9
removal, 24—8
I/O port addresses
8-bit computers, 16—10
KAYPRO 16, 19—48
KAYPRO 286i, 29—4
IC list
KAYPRO 10 (81-180-n), 6—17
KAYPRO 16 color graphics card (81-517), 19—5
KAYPRO 16 floppy-RAM-I/O card (81-515), 19—5
KAYPRO 16 mainboard (81-511), 19—4.1
KAYPRO 16 processor card (81-513), 19—6
KAYPRO 2 (81-110-n), 6—3
KAYPRO 2/4 (81-240-n), 6—9
KAYPRO 2/84 and 2X (81-294-n), 6—27
KAYPRO 286i mainboard (81-621), 23—9
KAYPRO 286i serial/parallel port card (81-623), 23—3
KAYPRO 4/84 (81-184-n), 6—35
KAYPRO ROBIE (81-296-n), 6—43
interface board, KAYPRO 10, 12—1
internal modem, 8-bit computers, 16—14
keyboard, 8-bit computers
cable pinouts, 13—1
codes and functions, 16—3
connector, 16—6
connector KAYPRO 10, 16—7
description, 13—1
keyboard, KAYPRO 16, 19—41
keyboard, KAYPRO 286i
connector, 23—16, 27—1
description, 27—1
keylock connector, KAYPRO 286i, 23—16

mainboard, 8-bit computers, 6—1
installation, 6—57
keyboard connector, 16—8
keyboard connector pin assignments, 16—6
keyboard connector pin assignments KAYPRO 10, 16—7
modem connector, 16—9
modem port pin assignments KAYPRO 10, 16—7
parallel printer connector KAYPRO 10, 16—7
parallel printer port, 16—9
parallel printer port pin assignments, 16—5
removal, 6—57
serial data channel, 16—8
serial port pin assignments, 16—6
serial printer connector, 16—8
serial printer connector KAYPRO 10, 16—7.1
troubleshooting tips, 6—1
video signals, 7—4
mainboard, KAYPRO 16
installation, 19—17, 19—21
removal, 19—16, 19—21
mainboard, KAYPRO 286i
80287 math co-processor, 23—8
connectors, 23—16
description, 23—8
IC list, 23—9
installation, 23—18
memory expansion, 23—8
RAM enable/disable switch, 23—8
removal, 23—18
schematics, 23—11
memory expansion, KAYPRO 286i, 23—8
memory map
KAYPRO 10, 17—3
KAYPRO 16, 19—49
KAYPRO 2 and 4, 17—2
KAYPRO 2/84 and 4/84, 17—4
KAYPRO 286i, 29—5
KAYPRO ROBIE, 17—5
modem cable (DTE), KAYPRO 16, 19—45, 19—46
modem connector, 8-bit computers, 16—9
modem port KAYPRO 10, 16—7
option switch settings, KAYPRO 16, 19—50
parallel port pin assignments, KAYPRO 286i, 29—1
parallel printer cable, KAYPRO 16, 19—42
parallel printer connector, KAYPRO 10, 16—7
parallel printer port KAYPRO 2/84 and 4/84, 16—9
parallel printer port, 8-bit computers, 16—5
parallel printer, KAYPRO 16, 19—42

pin assignments, KAYPRO 286i
   parallel port, 29—1
   RGB monitor, 29—3
   serial port, 29—2
power connector, KAYPRO 286i, 23—16
power supply, 8-bit computers
   220V configuration, 8—2
   fuse, 8—2
   removal, 8—5
   service warning, 8—1
power supply, KAYPRO 16
   220V configuration, 19—27
   description, 19—26
   installation, 19—29
   removal, 19—29
power supply, KAYPRO 286i
   230V configuration, 26—1
   description, 26—1
   installation, 26—2
   removal, 26—2
RAM enable/disable switch, KAYPRO 286i, 23—8, 23—16
real-time clock, 8-bit computers, 16—12
RGB monitor adapter pin assignments, KAYPRO 286i, 29—3
ROM revisions, 8-bit computers, 4—1
schematics, 8-bit computers
   KAYPRO 10, 6—21
   KAYPRO 2, 6—6.1
   KAYPRO 2/4, 6—13
   KAYPRO 2/84, 6—28
   KAYPRO 4/84, 6—36
   KAYPRO ROBIE, 6—44
   other, 6—50
schematics, KAYPRO 16
   color graphics card, 19—13
   floppy-RAM-I/O card, 19—11
   mainboard, 19—7
   processor card, 19—10
schematics, KAYPRO 286i
   mainboard, 23—11
   serial/parallel port card, 23—4
scope signals
   KAYPRO 10 (81-180-n), 6—18
   KAYPRO 2 (81-110-n), 6—4
   KAYPRO 2/4 (81-240-n), 6—10
serial data channel, 8-bit computers, 16—8
serial port KAYPRO 2 and 4, 16—6
serial port pin assignments, KAYPRO 16, 19—44, 19—46
serial port pin assignments, KAYPRO 286i, 29—2
serial printer cable (DCE), KAYPRO 16, 19—46
serial printer cable, KAYPRO 16, 19—44
serial printer port KAYPRO 10, 16—7.1
serial printer port KAYPRO 2/84 and 4/84, 16—8

serial/parallel port card, KAYPRO 286i, 23—2
   IC list, 23—3
   schematics, 23—4
service warning, 1—2
signal locations
   KAYPRO 2 (81-110-n), 6—6
   KAYPRO 2/4 (81-240-n), 6—12
speaker connector, KAYPRO 286i, 23—16
specifications
   KAYPRO 1, 3—9
   KAYPRO 10, 3—6
   KAYPRO 10 with clock and modem, 3—6.1
   KAYPRO 12X, 3—7.1
   KAYPRO 16, 19—2
   KAYPRO 2, 3—1
   KAYPRO 2/84 and 2X, 3—2
   KAYPRO 286i model A, 21—3
   KAYPRO 286i model B, 21—4
   KAYPRO 286i model C, 21—5
   KAYPRO 286i model D, 21—6
   KAYPRO 4, 3—3
   KAYPRO 4/84, 3—4
   KAYPRO 4X, 3—5
   KAYPRO NEW 2, 3—8
   KAYPRO ROBIE, 3—7
streaming tape drive, KAYPRO 286i
   description, 25—1
   installation, 25—2
   removal, 25—1
switch settings, KAYPRO 16, 19—50
symptom/fix guide
   KAYPRO 10, 15—8
   KAYPRO 2 and 4, 15—2
   KAYPRO 2/84 and 2X, 15—19
   KAYPRO 4X, 15—20
   KAYPRO ROBIE, 15—14
system boards
   KAYPRO 16, 19—4
   KAYPRO 286i, 23—1
tape drive controller card, KAYPRO 286i, 23—1
touch-up information, 5—2
troubleshooting, 8-bit computers, 15—1
   KAYPRO 10, 15—8
   KAYPRO 2 and 4, 15—2
   KAYPRO 2/84 and 2X, 15—19
   KAYPRO 4X, 15—20
   KAYPRO ROBIE, 15—14
type of display card jumper, KAYPRO 286i, 23—16
vendor addresses, 17—7
video command protocol, 8-bit computers, 16—1
video connector (composite), KAYPRO 16, 19—47
video connector (RGB), KAYPRO 16, 19—47
voltage selector switch, KAYPRO 286i, 26—1